ABLOY® EL520, EL522

High security DIN standard motor lock for wooden and metal doors

Product description
High security locks EL520/522 are used in environments where convenience, higher security, high durability or door automation is needed. The integrated monitoring contacts from the lock can be connected to the different systems.

Deadbolt is withdrawn inside the lockcase by motor and double action latch is released, when electrical control is on. Door is opened from outside by using door pull.
Also possible to connect with door automatics for full hands-free operation.

Inside handle opens lock mechanically (exit function), no need for electric control.

When door closes, dead bolt is thrown out automatically, double action latch is blocked and the lock case is secured in two points.

Overview of Advantages
- Motorized bolt traction for push&pull and door automatics use
- Day/night mode
- Electric anti-tampering: if deadbolt is thrown out when door is not closed, it is withdrawn in automatically.
- Mechanical automatic locking system
- Non handed, left / right
- Burglary-resistant due to dead bolt with 20 mm throw
- Exit function by inside handle
- Suitable for fire doors
- Mechanical override with cylinder
- Back-up function: If deadbolt is withdrawn by motor and then power is cut, deadbolt is thrown out immediately (closed door) or allowed to throw out (when door is closed).
- Monitoring functions
    - Door status
    - Handle down
    - Bolt deadlocked
    - Bolt in
    - Key cylinder used
    - Sabotage loop

Scope of delivery
- 1 pcs lock case
- 1 pcs control unit EA420
- Operating manual

Ordered separately
- Strike plate (e.g. EA324)
- Cable EA218 (6m) / EA219 (10m)
- Lead cover EA280/281
- Handle/pull set (e.g. DH622)
- Cylinder (e.g. CY321T)

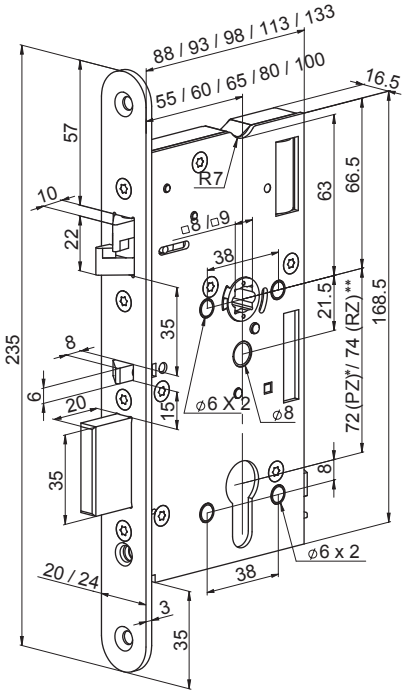

Technical data

Handing	Non-handed, left/right
Exit function	Yes
Mechanical cylinder override	Yes
Latch	Double action latch
Dead bolt	Yes, 20mm
Input operating voltage	12-24 VDC 12-18 VAC
Rated current consumption	12 VDC idle 80mA, normal drive 450mA, max. 1300mA 24 VDC idle 40mA, normal drive 220mA, max. 600mA
Relay capacity (monitoring contacts)	Max. 0.8 A 30 V AC/DC resist. 20 W
Suitable for fire doors	Yes
EN14846:2008	3S8D-L611
EN179:2008	376B1342AB
EN1125:2008	376B1321AB

We reserve the right to make alterations to the products described in this leaflet.

* EL520
** EL522

Abloy Oy Wahlforssinkatu 20 P.O. Box 108 FI-80101 Joensuu | Finland
Tel. +358 20 599 2501 Fax +358 20 599 2209 www.abloy.com