SIEMENS

Operating Instructions

VersiCharge

VersiCharge AC Wallbox

(8EM1310-...0.-...)

Edition 12/2021

siemens.com/versicharge

SIEMENS

VersiCharge AC Wallbox IEC

Operating Instructions

Introduction 1

Safety information 2

Description 3

Mounting / Installing / Connecting 4

Commissioning 5

Operation 6

Faults 7

Maintenance and service 8

Service & Support 9

Disposal 10

Technical specifications 11

Appendix A

List of abbreviations B

12/2021

A5E50366109-AA

Legal information

Warning notice system

This manual contains notices you have to observe in order to ensure your personal safety, as well as to prevent damage to property. The notices referring to your personal safety are highlighted in the manual by a safety alert symbol, notices referring only to property damage have no safety alert symbol. These notices shown below are graded according to the degree of danger.

⚠ DANGER
indicates that death or severe personal injury **will** result if proper precautions are not taken.

⚠ WARNING
indicates that death or severe personal injury **may** result if proper precautions are not taken.

⚠ CAUTION
indicates that minor personal injury can result if proper precautions are not taken.

NOTICE
indicates that property damage can result if proper precautions are not taken.

If more than one degree of danger is present, the warning notice representing the highest degree of danger will be used. A notice warning of injury to persons with a safety alert symbol may also include a warning relating to property damage.

Qualified Personnel

The product/system described in this documentation may be operated only by **personnel qualified** for the specific task in accordance with the relevant documentation, in particular its warning notices and safety instructions. Qualified personnel are those who, based on their training and experience, are capable of identifying risks and avoiding potential hazards when working with these products/systems.

Proper use of Siemens products

Note the following:

⚠ WARNING
Siemens products may only be used for the applications described in the catalog and in the relevant technical documentation. If products and components from other manufacturers are used, these must be recommended or approved by Siemens. Proper transport, storage, installation, assembly, commissioning, operation and maintenance are required to ensure that the products operate safely and without any problems. The permissible ambient conditions must be complied with. The information in the relevant documentation must be observed.

Trademarks

All names identified by ® are registered trademarks of Siemens AG. The remaining trademarks in this publication may be trademarks whose use by third parties for their own purposes could violate the rights of the owner.

Disclaimer of Liability

We have reviewed the contents of this publication to ensure consistency with the hardware and software described. Since variance cannot be precluded entirely, we cannot guarantee full consistency. However, the information in this publication is reviewed regularly and any necessary corrections are included in subsequent editions.

Siemens AG
Smart Infrastructure
Schuhstr. 60
91052 Erlangen
GERMANY

A5E50366109-AA
Ⓟ 12/2021 Subject to change

Copyright © Siemens AG 2021.
All rights reserved

Table of contents

1 Introduction ... 5

1.1 Purpose of this documentation ... 5

1.2 Conventions ... 5

1.3 Open-source software ... 6

2 Safety information ... 7

2.1 General safety information ... 7

2.2 Safety during setup, installation and maintenance ... 10

2.3 Safety during electrical installation ... 11

2.4 The five safety rules for electrical work ... 12

2.5 Safety during operation ... 13

2.6 Security information ... 14

2.7 Safety-relevant symbols ... 15

3 Description ... 16

3.1 Application ... 16

3.2 Structure of the Wallbox ... 17

3.3 User interface structure ... 18

3.4 Scope of delivery ... 19

3.5 Meter ... 20

3.6 Identifying the device ... 20

4 Mounting / Installing / Connecting ... 22

4.1 Safety measures during assembly ... 22

4.2 Preparations for mounting ... 23

4.3 Assembly procedure ... 24

4.4 Requirements for the electrical connection ... 27

4.5 Wiring position ... 28

4.6 Connecting the supply cable ... 29

4.7 Limiting the charging current ... 31

4.8 Connecting the communication cable ... 33

4.9 Switching contact output ... 35

4.10 Closing the Wallbox ... 37

4.11 Switching on and testing ... 38

5 Commissioning ... 39
5.1 Offline mode ... 39
5.2 Commissioning with PC or mobile device ... 39
5.3 Notes on setting up the communication connection ... 41
5.3.1 Required open ports ... 41
5.3.2 Wi-Fi connection ... 42
5.3.3 SIM card ... 42
5.3.4 Overview of Modbus, RS485 and Ethernet ... 44
5.3.5 Setting communication ... 45
5.4 Managing and using RFID ... 45
6 Operation ... 48
6.1 Status displays ... 48
6.2 Charging ... 52
7 Faults ... 55
7.1 Fault elimination ... 55
7.2 Error messages ... 55
8 Maintenance and service ... 60
8.1 Storage and transport ... 60
8.2 Cleaning and maintenance ... 60
8.3 Maintenance ... 61
8.4 Software update ... 62
9 Service & Support ... 63
9.1 Siemens Industry Support ... 63
10 Disposal ... 64
10.1 Recycling and disposal ... 64
11 Technical specifications ... 65
11.1 Technical specifications ... 65
A Appendix ... 67
A.1 Variants available for order ... 67
A.2 Accessories ... 68
A.3 Installation and maintenance schedule ... 69
A.4 Dimensions of the Wallbox ... 71
A.5 Quality documentation ... 72
B List of abbreviations ... 73
B.1 Abbreviations ... 73
Index ... 74

Introduction 1

1.1 Purpose of this documentation

These operating instructions contain the information required for installing, commissioning, and operating the VersiCharge AC Wallbox IEC.

The operating instructions contain information on the proper use of the Wallbox.

WARNING

Personal injury and damage to property when the information is not observed

Failure to comply with the information in these operating instructions may result in the following:

- Personal injury
- Material damage
- Dangerous situations
- Loss of warranty

Also follow vehicle-specific operating instructions for the respective vehicle.

1.2 Conventions

Figures in these operating instructions may deviate from the delivered device.

Observe the notes labeled as follows:

Note

A note contains:

- Important product information
- Information on how to handle the product

1.3 Open-source software

Open-source software is used in the firmware of the product described. The open-source software is provided free of charge. We are liable for the product described, including the open-source software contained in it, pursuant to the conditions applicable to the product. Siemens accepts no liability for the use of the open-source software over and above the intended program sequence, or for any faults caused by modifications to the software.

For legal reasons, we are obliged to publish the license terms and copyright notices in the original text. Please also read the information that is supplied with the product or made available for download on the Siemens homepage (https://siemens.com/versicharge).

Safety information 2

2.1 General safety information

This section provides important, general information on the following topics:

- Avoiding accidents or damage to property
- Application planning
- Mounting and installation
- Operation
- Maintaining and cleaning the Wallbox
- Disposal

Read this section carefully and follow the safety regulations. This will minimize safety risks.

Make your staff and customers aware of this section. Pass on the documentation to that group of people.

Regulations and guidelines

The "Safety instructions" chapter describes hazards and precautions which you must follow during planning, assembly, installation, operation and maintenance. In addition, regional and national guidelines, directives and regulations for electrical safety and accident protection as well as occupational safety must be observed.

Also follow these regulations and specifications:

- Regional standards and connection conditions
- Building regulations for parking spaces for electric cars including Wallbox.
- Guideline of the electricity supplier
- Equipment and foundation statics

The instructions in the documentation do not replace statutory safety instructions.

Target group

The sequence of the following safety instructions is based on the use stages of the product life cycle. The description addresses the following persons:

- The operator responsible for the safe operation of the device
- Technicians who set up the device
- Electrically skilled personnel who connect and start up the device.
- Maintenance and cleaning staff who maintain the device
- Users who charge the vehicle

Qualified electricians are persons who can demonstrate a professional electrician qualification. These persons are authorized to commission, ground, and label devices, systems, and circuits in accordance with established safety practices and standards.

Areas of application of the device

- Charging electrically operated vehicles in public and semi-public areas
- Charging stations for depots, car parks, public parking areas, and retail
- Stations for car-to-go projects

Intended use

The device is used to charge batteries in fully electric and plug-in hybrid vehicles. The Wallbox can be used indoors and outdoors.

Charge electric vehicles according to IEC 61851-1 and 61851-22. Any other use or use that goes beyond the use described here is not intended and represents a misuse of the device.

According to the product liability act, you are obliged to prevent any predictable, unreasonable or improper use of the device.

Expiration of the manufacturer's warranty due to unauthorized modifications to the device

Modifications to the device are not permitted. Non-compliance will void the manufacturer's warranty and invalidate the approvals.

Unauthorized opening of the device

Risk of electric shock

Only qualified personnel may open the device. Unauthorized persons risk causing considerable property damage, serious injuries, or death.

Qualified personnel

All activities, apart from use, are to be performed by qualified personnel. Due to their training, experience and instruction, such people have knowledge of the following topics:

- Relevant standards and regulations
- Accident prevention regulations

They are authorized to perform the necessary activities and to detect and prevent possible dangers.

Personal protective equipment

Avoid accidents and hazardous situations. Use your personal protective equipment according to the activity you are performing, such as safety goggles, gloves, safety shoes.

Safety equipment

To rule out hazardous conditions, it is strictly prohibited to change, remove, bypass, or override safety devices.

Failure to follow these instructions may result in hazardous situations that could cause death or serious injury.

Risk of explosion and fire

Do not store or use highly flammable liquids that produce flammable vapors, such as gasoline or ethanol, in the proximity of the Wallbox. Electrostatic charge or heat generated during charging can ignite explosive and flammable liquids.

Failure to follow these instructions may result in hazardous situations that could cause death or serious injury.

Floodwater

Disconnect the Wallbox if there is any danger that it is or will be fully or partially submerged in water, e.g. due to backwater, flooding or heavy rain. Water infiltration or humidity may lead to severe damage to the Wallbox.

Only qualified personnel may dry the Wallbox and check it for suitability of safe operation. Moisture or water in the Wallbox can lead to electric shock.

Charging cable as a tripping hazard

The charging cable can become an obstacle while it connects the Wallbox and vehicle. Ensure that the charging cable does not block any escape route or constitute a risk of tripping in another way.

When tripping over a charging cable, it can be unintentionally ripped out from the socket outlet and cause damage to the vehicle or Wallbox.

Cleaning

Clean the surface of the Wallbox with a damp cloth. Protect the environment and use only biodegradable cleaning agents.

Do not use steam jets or water jets for cleaning. Penetrating moisture can lead to severe damage to the Wallbox. Moisture or water in the Wallbox can lead to electric shock.

Failure to observe the danger notices may lead to severe injuries that may result in death.

2.2 Safety during setup, installation and maintenance

To avoid any danger, only qualified personnel may set up and mount the Wallbox. The Wallbox must be in a deenergized state. Follow the installation and assembly instructions provided. Observe the applicable regional standards and regulations, such as the five safety rules (see also The five safety rules for electrical work (Page 12)). Failure to follow safety instructions may result in hazardous situations that could cause death or serious injury.

Safety at the work site

When working on roads, construction sites and in public areas, ensure safety in line with local requirements and regulations.

Observe the applicable guidelines and directives for proper implementation:

- Legal specifications
- On-site safety requirements
- Road traffic conditions

Note the following:

- Secure the working area in accordance with the "Guidelines for the safety of workstations on roads" or similar regional regulations.
- Use appropriate cordoning equipment where necessary.
- Always wear a safety vest when working in the area of road traffic.
- Ensure sufficient free workspace with a diameter of at least 8 meters.
- Comply with the valid building regulations for parking spaces for electric cars including the Wallbox.

Risk of accident in limited workspace

Leave sufficient clearance to surrounding obstacles to avoid collisions and crushing when setting up the Wallbox.

There must be no objects on the ground in the working area to rule out the risk of tripping.

Electrical cables

There is a risk of electric shock due to exposed electrical connections and components.

Before starting the installation work, check that the supply cable has been disconnected from the mains and secured against restart.

If damage or tampering is visible, do not operate the Wallbox.

Crushing hazard

Ensure that persons maintain sufficient distance to avoid injury when putting the Wallbox down.

2.3 Safety during electrical installation

Observe the following points for the electrical installation. The electrical connection of the Wallbox may only be performed by skilled electricians and may only be carried out in a deenergized state. Follow the installation and connection instructions. Observe the applicable regional standards and regulations, such as the five safety rules (see also The five safety rules for electrical work (Page 12)). Failure to follow safety instructions may result in hazardous situations that could cause death or serious injury.

Risk of electric shock

The Wallbox operates with 230 V AC or 400 V AC supply voltage. Touching live parts may cause electric shock and could be fatal. To prevent any hazard, only qualified and trained electricians may open the Wallbox.

Before opening the Wallbox, switch off all power supplies for the device. Secure the Wallbox against being switched on again.

Damage to sockets and charging cable

Inspect sockets and the charging cable for damage on a regular basis. Damaged charging cables endanger safe operation.

If you detect damage to the charging cable, do not commission the cable or stop a running charging process. Deenergize the charging cable without touching the cable. Ensure that the device cannot be switched back on.

If you notice damage to the Wallbox, take it out of service. To do this, disconnect the Wallbox from the power supply and secure it against being switched on.

Defective connectors or cables may cause fire. Decommission the system if there are defects. Have the defective parts repaired by qualified personnel.

Condensed water

Before commissioning the Wallbox, a skilled electrician must check whether there is condensed water in the Wallbox. Remove even small amounts of condensed water before commissioning.

Moisture in the Wallbox can lead to electric shock.

2.4 The five safety rules for electrical work

The European standard EN 50110-1 "Operation of electrical installations" prescribes safety rules for electrical work on and in electrical installations. To ensure the safety of persons and property in accordance with the standards, always comply with the following safety rules.

Securing an electrical system before starting work

Before starting work on and in electrical installations, apply the following five safety rules:

1. Disconnect
2. Secure against reclosing
3. Ensure there is no voltage present
4. Ground and short-circuit
5. Cover or shield adjacent live parts

Prepare to switch on again after work is finished

After finishing and checking the work, prepare the restart as follows:

- Inform all involved persons that the work is completed and no further work is permitted.
- Remove any persons no longer involved from the work environment.
- Remove all tools, equipment and aids used

Switch on the electrical system again

After finishing the work, remove the protective measures and switch the system on again:

1. Remove short-circuit
2. Remove grounding
3. Remove covers or barriers
4. Remove fuse to prevent restart
5. Switch the system back on

2.5 Safety during operation

Observe the following points when operating the Wallbox, as well as the applicable regional standards and regulations. Failure to follow safety instructions may result in hazardous situations that could cause death or serious injury.

Electrical hazards

The Wallbox uses 230 V AC or 400 V AC supply voltage. Touching live parts may cause electric shock and could be fatal.

Work on the electrical installation may only be carried out by trained electricians and at zero current.

- Pull the plug, not the mains cord.
- Never touch the plug with wet hands.
- Do not perform any installation, maintenance, or configuration work during a thunderstorm.
- Do not connect the vehicle to or disconnect it from the Wallbox during a storm.

Charging cable and socket

Defective connectors or cables may cause fire. Decommission the system if there are defects. Have the defective parts repaired by qualified personnel.

Do not bend or squeeze the charging cable; do not run it over sharp edges, and use it only within the permissible temperature range.

Inspect sockets and the charging cable for damage on a regular basis.

2.6 Security information

Siemens provides products and solutions with industrial security functions that support secure operation of plants, systems, machines, and networks.

In order to protect plants, systems, machines, and networks against cyber threats, it is necessary to implement – and continuously maintain – a holistic, state-of-the-art industrial security concept. Siemens' products and solutions constitute one element of such a concept.

Operators of the Wallbox are responsible for preventing unauthorized access to their plants, systems, machines and networks. Such systems, machines and components should only be connected to an enterprise network or the internet if and insofar such a connection is necessary, and only when appropriate safety measures (e.g. firewalls and/or network segmentation) are in place.

Additional information on industrial safety measures can be found under (https://www.siemens.com/industrialsecurity).

Siemens' products and solutions undergo continuous development to make them more secure. Siemens strongly recommends applying product updates as soon as they are available and using the latest product versions. Use of product versions that are no longer supported, and failure to apply latest updates may increase customer's exposure to cyber threats.

To stay informed about product updates, subscribe to the Siemens Industrial Security RSS Feed under (https://www.siemens.com/industrialsecurity).

Password

Assign a secure password during commissioning to protect the Wallbox against unauthorized access.

To do this, follow the current recommendations for security in the information technology when selecting the password.

2.7 Safety-relevant symbols

Symbols for the Wallbox

The following table explains icons than may be located on your product, on its packaging, or in the accompanying documentation.

Symbol	Meaning
	General warning sign **Caution/Notice** You must read the product documentation. The product documentation contains information about the type of potential hazard and helps to recognize risks and implement countermeasures. ISO 7000 No. 0434B, DIN ISO 7000 No. 0434B
	Read the information provided in the product documentation. ISO 7010 M002
	Ensure the device is only installed by an electrically skilled person. IEC 60417 No. 6182
F<2N DISPLAY F<4N HOUSING	Adhere to the values for the mechanical load of the device.
CABLE SPEC.	Note that connected mains lines must be designed according to the expected minimum and maximum ambient temperature.
EMC	Ensure that the device is set up and connected in compliance with EMC requirements.
U = 0V	Note that when the device is live, it must not be installed or removed and cables must not be plugged or pulled.
	Note that a device may be exposed to electrical voltages which can be dangerous. ANSI Z535.2
	Do not dispose of the old device with household waste. Follow local, national, and international regulations for disposal.

Description

3

3.1 Application

The Wallbox is used for safe and reliable charging of electrically powered vehicles.

Use

You can operate the Wallbox as individual charging station ("standalone") or in a network consisting of several charging stations (parent-child architecture).

Fields of application

- Charging electrically powered vehicles in public and semi-public space
- Charging in private areas

NOTICE
Special conditions Charging of vehicles that require ventilation during the charging process is not possible with the Wallbox.

Functions and properties

- Charging of electric vehicles according to IEC 61851-1 and IEC 61851-22
- Rust-free housing made from resistant plastic
- Connectable charging socket Type 2 or permanently installed charging cable with Type 2 plug according to IEC 62196
- Communication via Open Charge Point Protocol (OCPP)

In conjunction with a Siemens backend system (e.g. Siemens Device Management), the Wallbox offers additional functions:

- Connection and control via network, smartphones, and digital terminals
- Centralized monitoring, maintenance, and evaluation
- Firmware updates

3.2 Structure of the Wallbox

The following figure shows the structure of the Wallbox from the front and the rear.

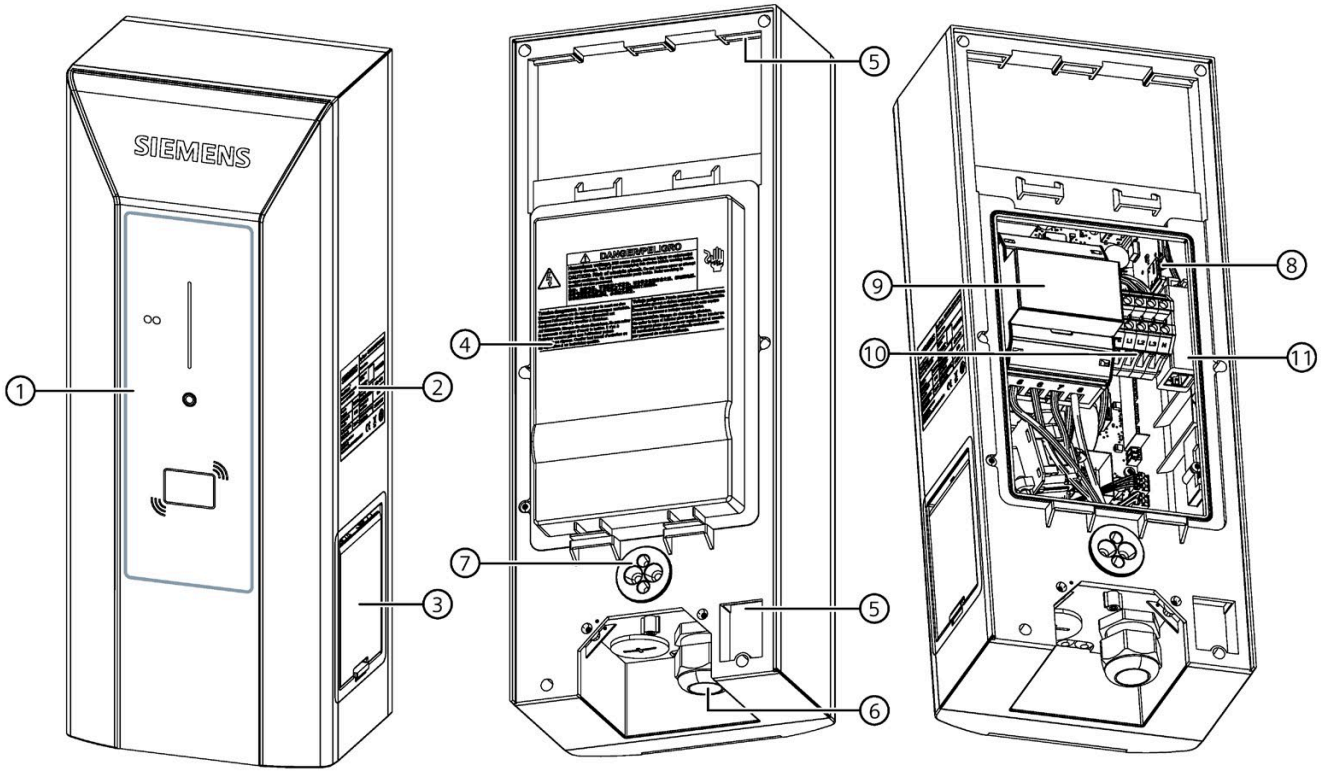

① User interface
② Nameplate
③ Charging socket
④ Connection area protective cover
⑤ Mount point of wall bracket
⑥ Entry of supply cable
⑦ Entry of communication cable
⑧ SIM card slot
⑨ MID counter
⑩ Connecting terminals
⑪ LAN interface

Figure 3-1 Structure

3.3 User interface structure

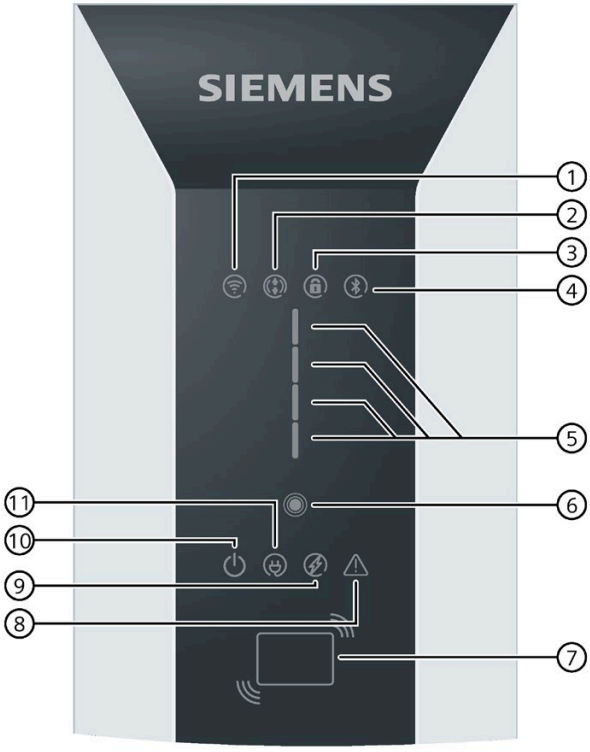

① Wi-Fi status
② Remote control
③ Front panel locked
④ Bluetooth status (not used)
⑤ Multifunction display for charging status / RFID / time delay / error conditions
⑥ Touch button
⑦ RFID reader
⑧ Status LED Error
⑨ Status LED Charging active
⑩ Status LED Power
⑪ Status LED Vehicle connected

Figure 3-2 Structure of the Wallbox

3.4 Scope of delivery

Scope of delivery

The following components are included in the scope of delivery:

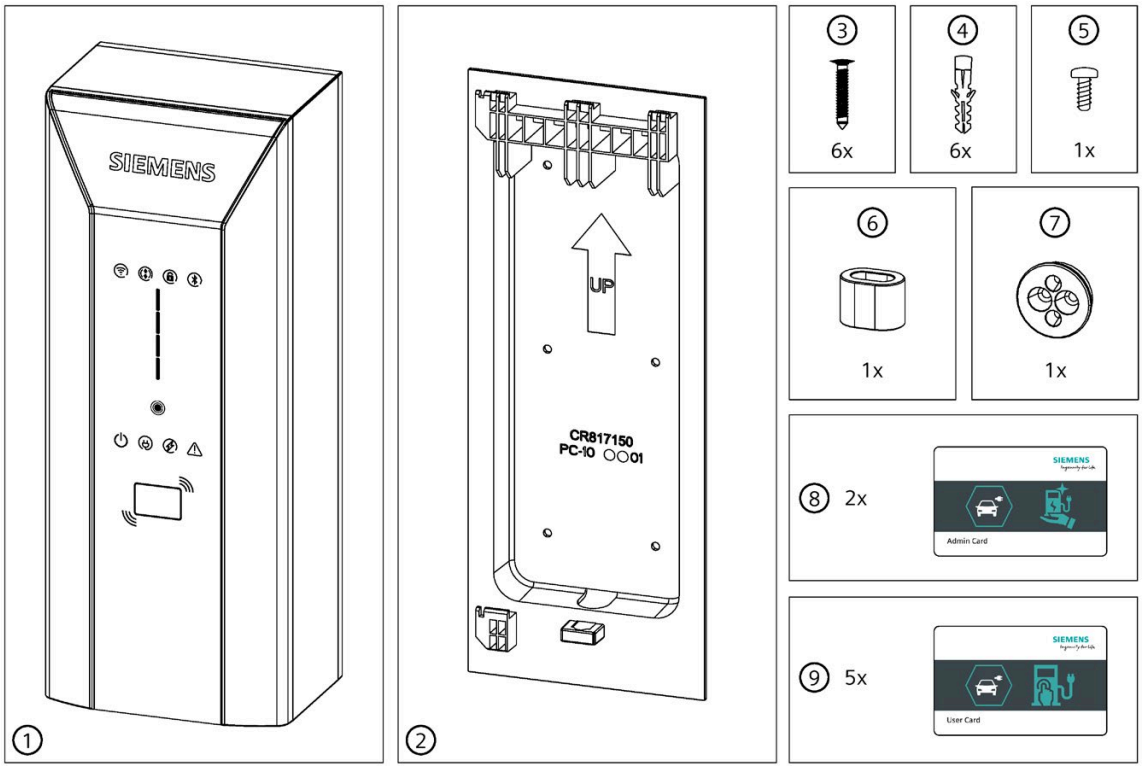

① 1x Wallbox (here as symbol drawing for lockable charging socket Type 2 or permanently installed charging cable with Type 2 plug according to IEC 62196)

② 1x wall bracket

③ 6x fastening screw DIN 7996 5x40

④ 6x dowel 8x40

⑤ 1x securing screw ISO 14583 M3x8

⑥ 1x ferrite core

⑦ 1x reducer cable entry

⑧ 2x RFID card Admin

⑨ 5x RFID card User

3.5 Meter

The Wallbox has an integrated, MID-compliant electricity meter. The meter value is available in the VersiCharge app / Device Manager.

See also

Technical specifications (Page 65)

3.6 Identifying the device

Nameplate

The nameplate is located on the outside of the Wallbox and provides information on the device ID, serial number, and key connection data.

Information on the nameplate will help service and support with troubleshooting and procuring matching spare parts. For this reason, do not remove the rating plate. Make sure that the information is legible.

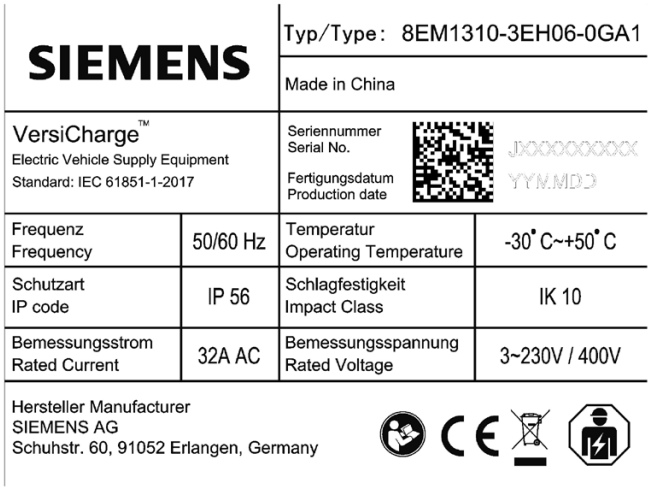

Article number

The article number has the following structure:

8	E	M	1	3	1	①	-	②	③	④	⑤	⑥	-	⑦	⑧	⑨	⑩

①	0= Default version
②	2 =32 A single-phase / 7.4 kW 3= 32 A 3-phase / 22 kW
③	E= Integrated meter, MID-compliant
④	H= Socket type 2, outlet right J= Cable with plug type 2 (7 m), outlet right
⑤	0= IEC
⑥	4= RTU/TCP Modbus + Ethernet+WiFi
⑦	0= without SIM card slot (without mobile wireless connection) 3= with SIM card slot (default modem GSM/ LTE)
⑧	G= RFID, without credit card function
⑨	A= Default color Silver Metallic Pantone 10077, Default cover
⑩	0= Child type 1= Parent type without SIM card 2= Parent unit including SIM card preconfigured

Mounting / Installing / Connecting 4

4.1 Safety measures during assembly

General information

Charging of electric cars must guarantee high electrical performance over long periods. The pre-installation of the power supply and the installation of the Wallbox must comply with the power requirements. To ensure that these requirements are fulfilled correctly, these installation instructions are intended for qualified and trained electricians. As a qualified electrician, you are responsible for safety, not only during installation, but also during subsequent use by the operator and the end user.
To this end, follow The five safety rules for electrical work (Page 12).

Mount the Wallbox on a load-bearing wall or on a column intended for this purpose.

Route the cables from below to the Wallbox.

DANGER

Risk of electric shock due to exposed electrical connections and components

Before starting the installation work, check that the supply cable has been disconnected from the mains and secured against restart.

Do not connect the Wallbox if damage or tampering is visible.

WARNING

Follow all safety instructions. This will help you avoid hazardous situations that could result in serious injury or death.

Comply with all national requirements for testing the installation. Only qualified personnel may mount the Wallbox. The following points describe the step-by-step mounting of the Wallbox. Additional steps may be necessary at your location of use. These assembly instructions therefore do not claim to be exhaustive.

See also

Preparations for mounting (Page 23)

4.2 Preparations for mounting

Requirements

- Follow the national legal requirements for the mounting and electrical installation.
- Installation site:
  - The wall is even and load-bearing
  - When mounting on a column or anywhere else, observe the applicable installation and mounting information.
- Connection to the power supply is ready.
- All power supply connections are de-energized and secured against unintentional reconnection.

Required tools

The required tools are not included in the scope of delivery.

- SW 36 open-ended wrench
- Optional cable gland
- Phillips head screwdriver set
- Slotted screwdriver set
- Torx TR screwdriver set
- Tool set for electricians
- Spirit level
- If applicable, crimping tool and installation tool for RJ45 plug

Tools for stone wall or concrete wall:

- Impact drill
- Masonry drill ∅ 8 mm
- Hammer

4.3 Assembly procedure

Specific safety measures

DANGER

Risk of electric shock when moist due to condensed water

Before commissioning the Wallbox, an authorized and qualified electrician must check whether there is moisture in the Wallbox. Remove even small amounts of condensed water before commissioning. Take appropriate measures for drying.

Do not switch off the power supply for an extended period of time after commissioning. This prevents condensation in the Wallbox. If the Wallbox is to be switched off for a longer period of time, you need to provide suitable moisture protection.

WARNING

Risk of accident

Risk of accident through a non-secured Wallbox.

- Do not put the Wallbox down unattended.
- Place or lay down the Wallbox and its parts in such a way that the Wallbox and its parts cannot tip over or fall down.

WARNING

Risk of accident

Risk of accident in limited space. Leave sufficient clearance to surrounding obstacles to avoid collisions and crushing when setting up the Wallbox.

- Ensure that there is sufficient clearance to the surrounding obstacles when setting the load down.
- Keep the working area free of objects to avoid the risk of tripping.

Preparing the assembly

1. Check the prerequisites in the chapter Preparations for mounting (Page 23).
2. Carefully open the packaging.
3. Provide a base for setting the Wallbox down.
4. Carefully remove the Wallbox from the packaging.
5. Check the Wallbox for damage. Complaints filed after installation will not be accepted.
6. Check the package content (Page 19)

DANGER

Risk of electric shock due to exposed electrical connections and components

Before starting the installation work, check that the supply cable has been disconnected from the mains and secured against restart.

If damage or tampering is visible (e.g. on the enclosure, socket), do not operate the Wallbox.

Mounting the wall bracket

1. Remove the wall bracket from the Wallbox.

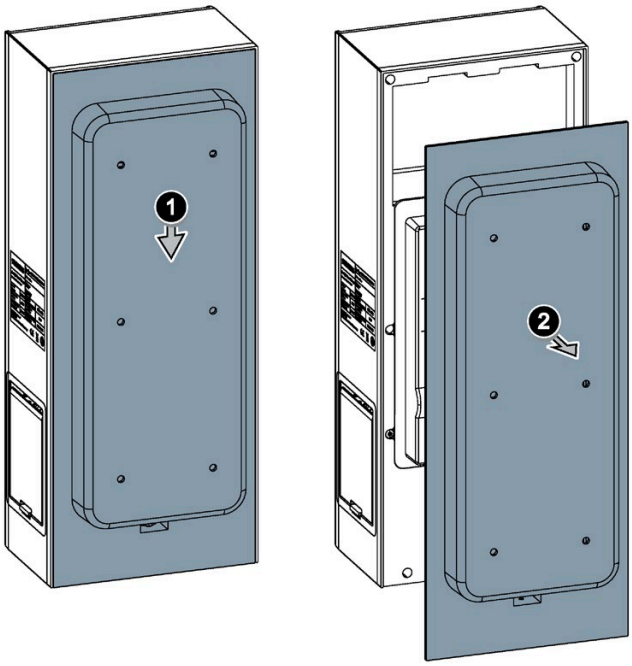

Figure 4-1 Removing the wall bracket

2. Align the wall bracket to the mounting surface using a spirit level. Use the wall bracket to mark the mounting holes.

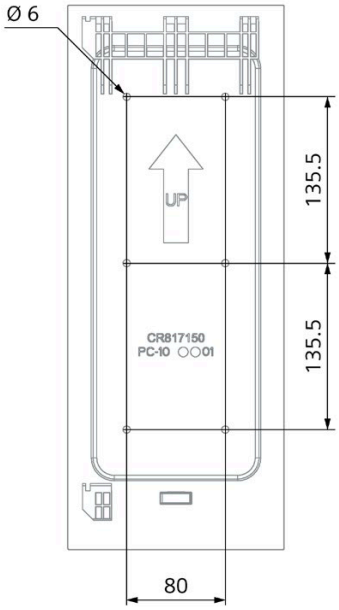

Figure 4-2 Drill picture

3. Put the wall bracket to one side and drill the holes in the wall.
4. Insert the dowels in the drilled holes.

5. Drive the dowels into the wall with the hammer until the dowels are flush with the wall.
6. Mount the wall bracket onto the wall using the screws. To avoid damage to the wall bracket, do not tighten the screws too much. Ensure that the wall bracket is mounted securely.

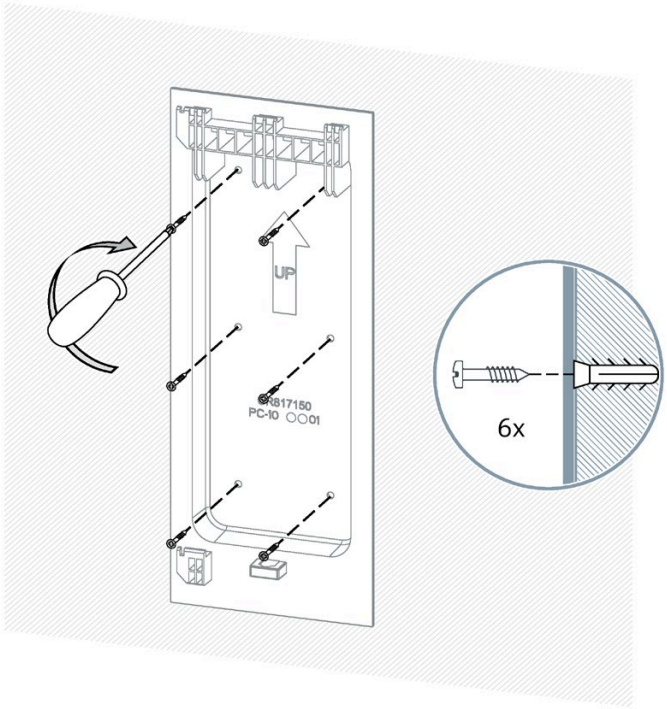

Figure 4-3 Mounting the wall bracket

Note

When mounting on a column or pillar, follow the applicable mounting instructions. You may need to use different screws and tools.

4.4 Requirements for the electrical connection

The Wallbox is approved exclusively for fixed installation and has no device for disconnection from the mains. The national regulations and standards must be followed during installation of the supply line. There is no integrated circuit breaker or residual current device; these must be installed upstream. A Type A circuit breaker is generally sufficient due to the integrated DC fault current monitoring.

Also note the regulations in place for upstream protection from transient overvoltages (e.g. through lightning), for example, by using SPDs (Surge Protection Device) according to IEC 60364-7-722.

4.5 Wiring position

Hook the Wallbox into the upper and lower notch of the wall bracket.

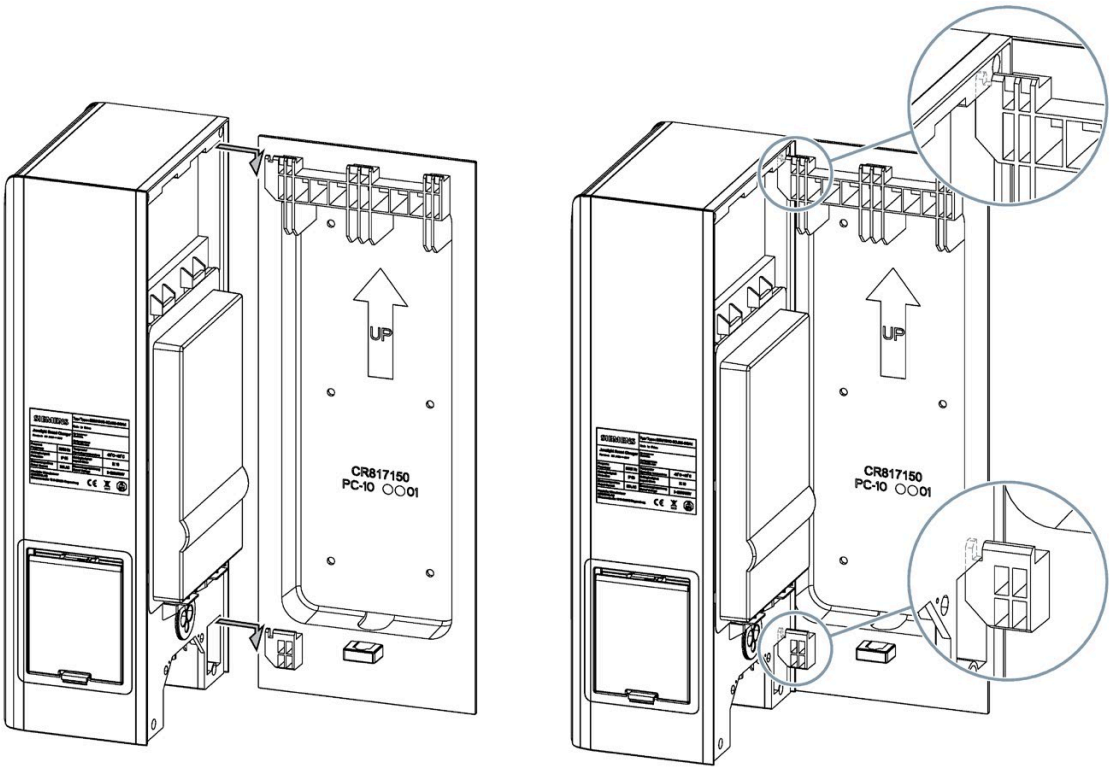

Remove protective cover: Remove the protective cover of the Wallbox by pressing the two clips upwards to obtain access to the electronics.

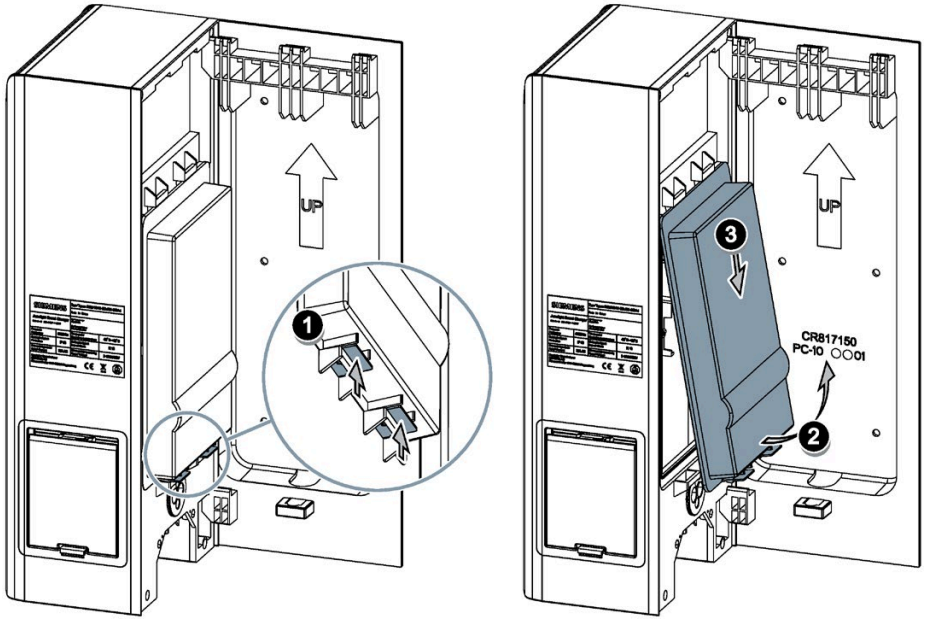

4.6 Connecting the supply cable

Select the cable cross-section according to laying type, load and voltage drop:

Note

3-phase connection

Wallboxes with article number 8EM131.-3.0.-.... must be connected using a 3-phase connection (field rotating clockwise) +N +PE. A single-phase connection is not permitted. Technical specifications can be obtained from the nameplate (Page 20).

Note

1-phase connection

Wallboxes with article number 8EM131.-2.0.-.... are connected using a 1-phase connection +N +PE. Technical specifications can be obtained from the nameplate (Page 20).

NOTICE

Neutral conductor must always be connected

The neutral conductor must be connected in any case, otherwise the device may be destroyed. For TN-C networks, a cable bridge N-PE must be used if necessary.

Procedure

DANGER

Risk of electric shock

When connecting the Wallbox, pay attention to the five safety rules (see also The five safety rules for electrical work (Page 12)).

To connect the supply cable, proceed as follows:

1. Insert the supply cable through the cable entry and connect the supply cable.

Note

Wire end sleeves when using stranded cables

When connecting stranded cables, use wire end sleeves.

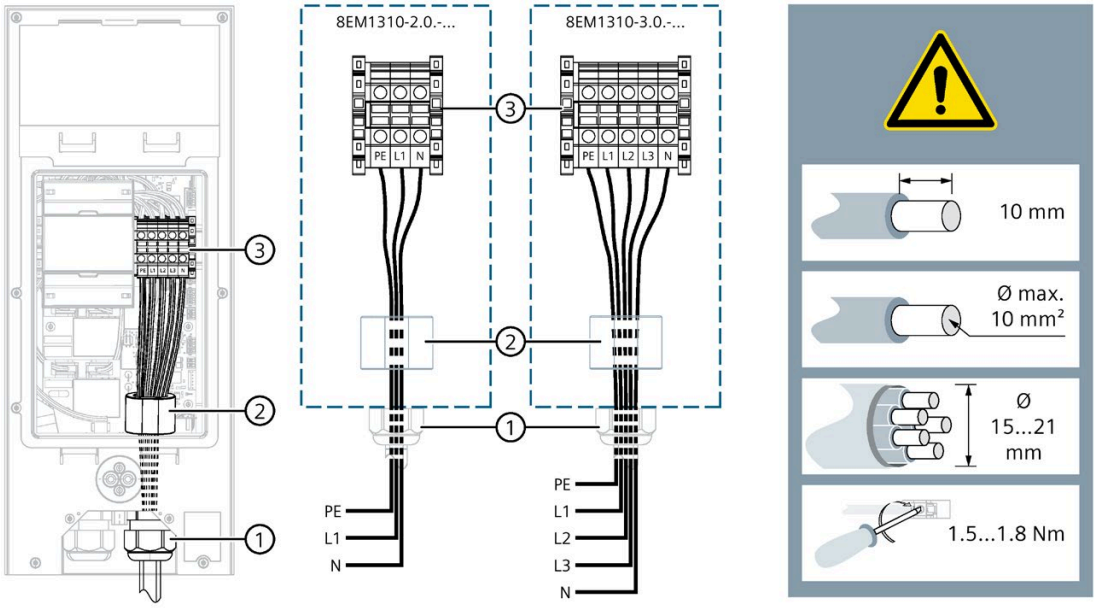

① Cable entry
② Ferrite core
③ Supply line at the terminal block

Figure 4-4 Infeed of Wallbox 8EM1310-..0.-....

Note

For versions with socket outlet type 2, make sure that the auxiliary activation of the connector lock (red lever) is not hindered or blocked by the connected cables. Check this by carefully activating the lever (swivel range max. 90°). Move it back to the vertical position afterwards.

2. Tighten the nuts of the cable gland by hand to ensure a tight seal and strain relief. Use the supplied reducer for cables with 9 to 15 mm outer diameter. Check that the seal is sitting correctly.

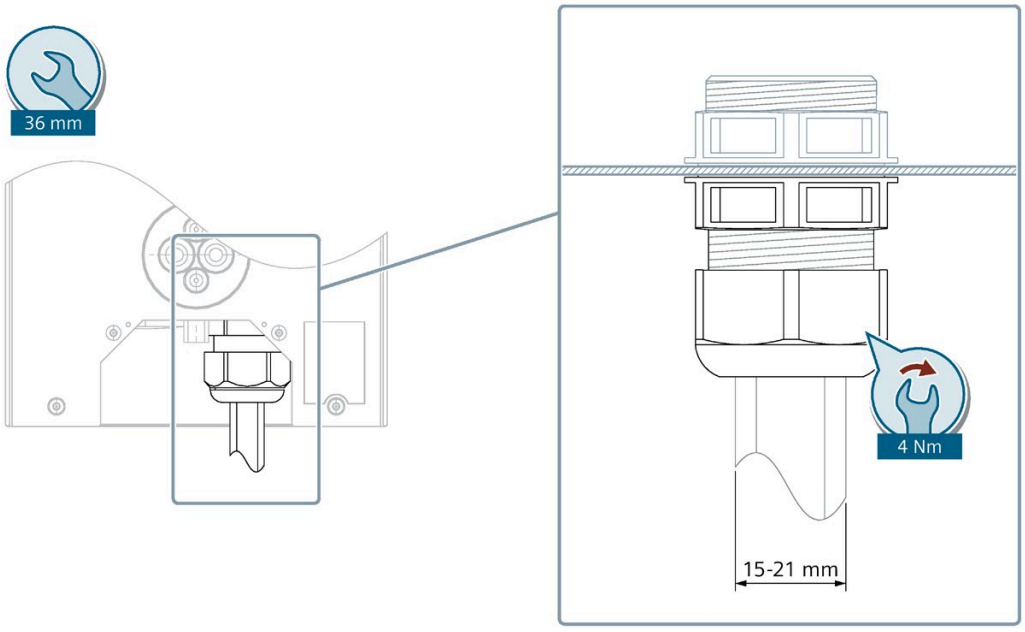

Figure 4-5 Infeed of Wallbox 8EM1310-..0.-....

4.7 Limiting the charging current

The rated current of the respective model (see nameplate) is set for the Wallbox in the factory. This can be limited further using the selector switch placed on the charging controller, see the figure below.

Note

Work can only be performed by an qualified electrician

Only a qualified electrician can limit the maximum charging current to the infeed power using the rotary switch. The design and protection of the supplying current circuit must be adapted to the set charging current. Observe the local regulations and connection conditions.

Setting the amperage of the Wallbox unit*

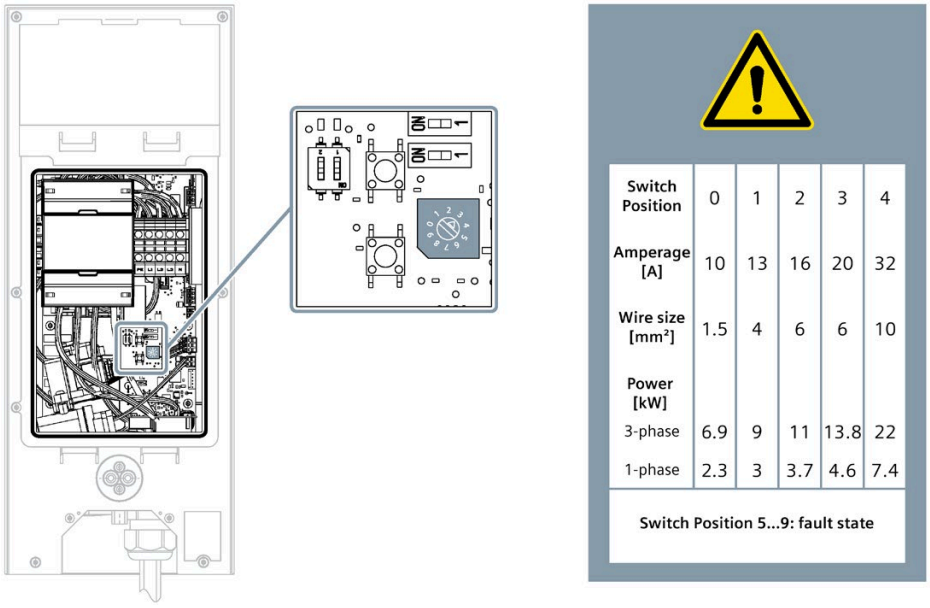

Switch Position	0	1	2	3	4
Amperage [A]	10	13	16	20	32
Wire size [mm²]	1.5	4	6	6	10
Power [kW]					
3-phase	6.9	9	11	13.8	22
1-phase	2.3	3	3.7	4.6	7.4

Switch Position 5...9: fault state

Figure 4-6 Charging current

1. Open the cover.
2. Remove the protective cover.
3. Set the desired charging current by turning the selector switch to the corresponding value.
4. Close and secure the cover of the Wallbox. Check that the seal is sitting correctly.

Note

In positions 5 to 9, the current is increased to no higher than the maximum value for which the hardware is designed.

4.8 Connecting the communication cable

Connection of the communication cables

Proceed as follows to connect the communication cables for Ethernet or Modbus:

Note

Connect the plugs after insertion

Only mount the RJ45 plug or Modbus RTU plug after insertion through the sealing insert. Mounting the plug before insertion results in damage to the sealing insert.

1. Guide the communication cables for Ethernet or Modbus through the wall bracket.
2. Make a small hole in the sealing insert using a small screwdriver, for example.
3. Guide the cables through the sealing insert at the bottom of the device into the Wallbox.
4. Mount the required plug-in connectors. Follow the specifications of the connector manufacturer.
5. Insert the necessary connectors into the corresponding socket on the board.

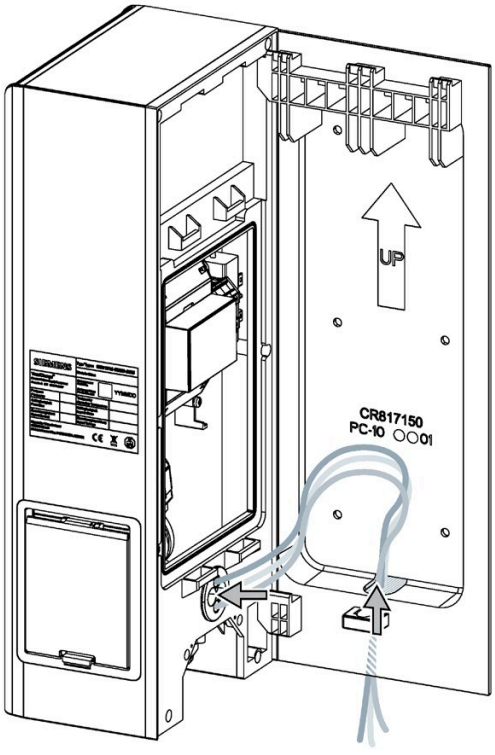

Connection plugs and DIP switches

The following figure shows the connection plugs and DIP switches for the communication cables.

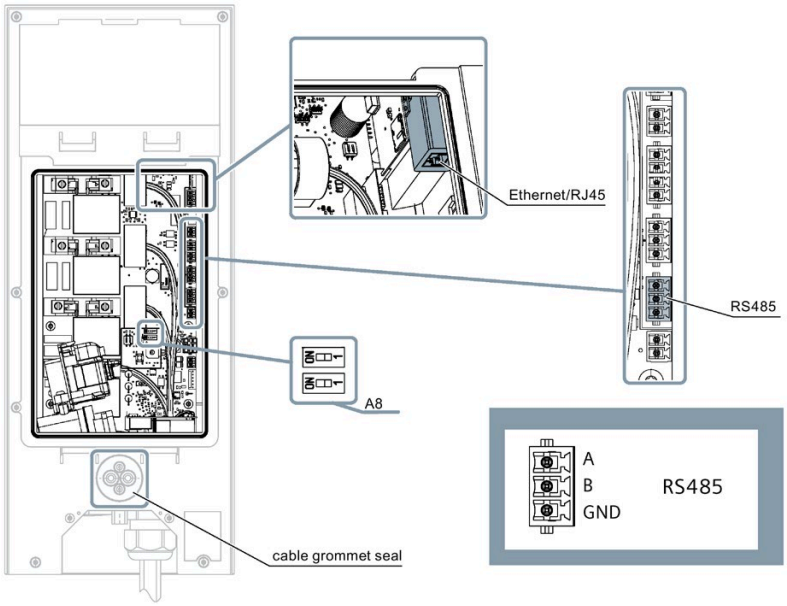

Note

DIP switch settings on the device for Modbus RTU setup

A8 is the terminating resistor switch for the Modbus RTU protocol. Set this switch at both ends of the bus connection to ON.
On all devices in between, set this switch to OFF.

Additional information

You can find additional information on the topic of communication here (Page 44).

4.9 Switching contact output

The Wallbox has a contact that is closed when a malfunction of the relay is detected. The contact can be used to disconnect the wallbox from the power supply by means of external wiring. An example of a protective circuit is shown in this section.

Requirements:

- Firmware version 2.113.0.99 or higher is required

Technical specification for the switching contact output (input/output):

- 2x 0.5 mm^2 cross section
- Vn: 24V (Vmax: 30V)
- Imax: 3A

Installation sequence

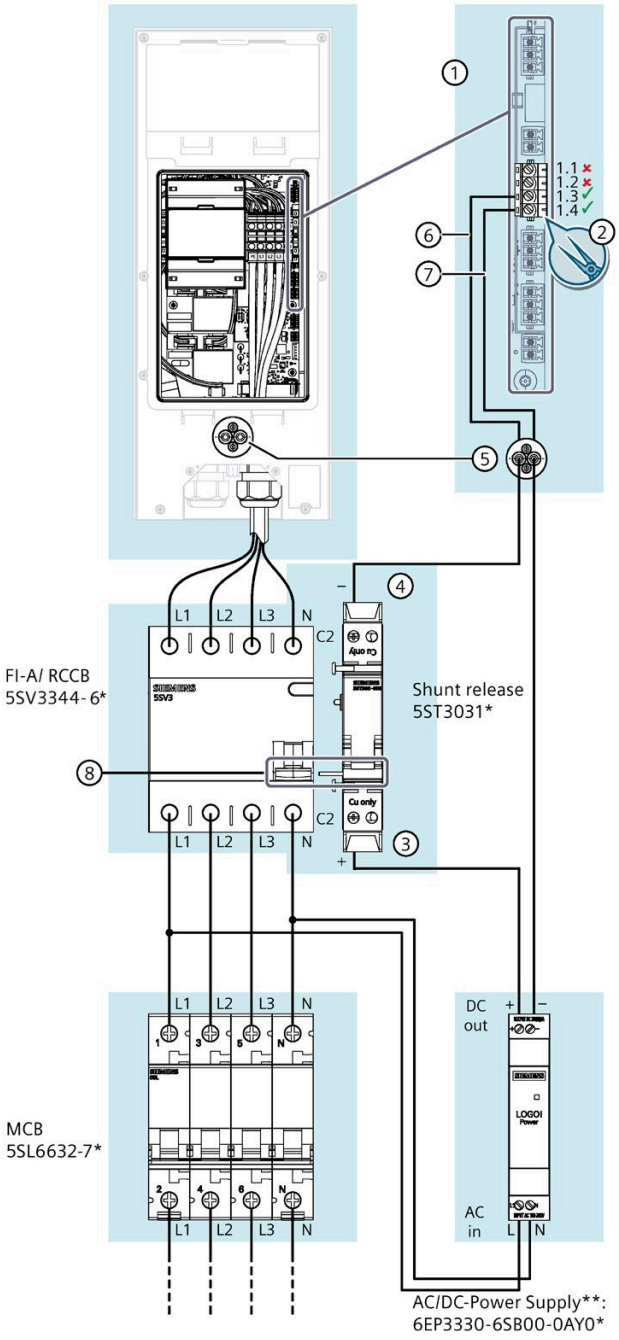

1. Make sure that the miniature circuit breaker and the residual current operated circuit breaker (FI-A/RCCB) are installed and connected according to the manufacturer's instructions.
2. Install the SR on the DIN rail directly next to the RCD switch and connect the brackets mechanically via the integrated pin ⑧ of the SR.
3. Connect the supply cable of the AC/DC power supply unit according to the figure and the manufacturer's instructions.
4. Remove the four-pole screw-type terminal connector ① from the PCB using a suitable tool (e.g. curved snipe nose pliers) ②.
5. Connect pin ③ of the SR by means of the control line to the AC/DC power supply unit output (+24V).
6. Connect pin ④ of the SR by means of the control line. Connect the AC/DC power supply unit output (0V) via the control line and guide both cables through the sealing element ⑤.
7. Connect the other two ends of the control lines to the contacts 1.3 ⑥ and 1.4 ⑦ of the four-pole screw-type terminal connector ①. Make sure that you connect the correct pins 1.3 and 1.4.
8. Place the four-pole screw-type terminal connector ① back to its original location on the PCB using a suitable tool (e.g. curved snipe nose pliers) ②.
9. The contact between ⑥ and ⑦ is closed in the event of a malfunction of the wallbox output relays, which activates the SR and thus trips the RCD switch.

Note:

*** Sample components**

The components shown here are recommendations that can be replaced with devices that have the same properties. Technical documentation of the component manufacturer must be observed.

Note:

**** Multiple current releases**

Several shunt releases can be supplied via one AC/DC power supply unit, see specification of the components used.

4.10 Closing the Wallbox

Attach the protective cover for the electronics again (not in illustration). Check that the seal is sitting correctly. Make sure that the cables are not pinched or bent when hooking the Wallbox into the wall bracket. Lift the Wallbox from the wiring position and close the Wallbox by placing the Wallbox onto the wall bracket. Secure the Wallbox against unauthorized opening with the supplied M3x8 screw.

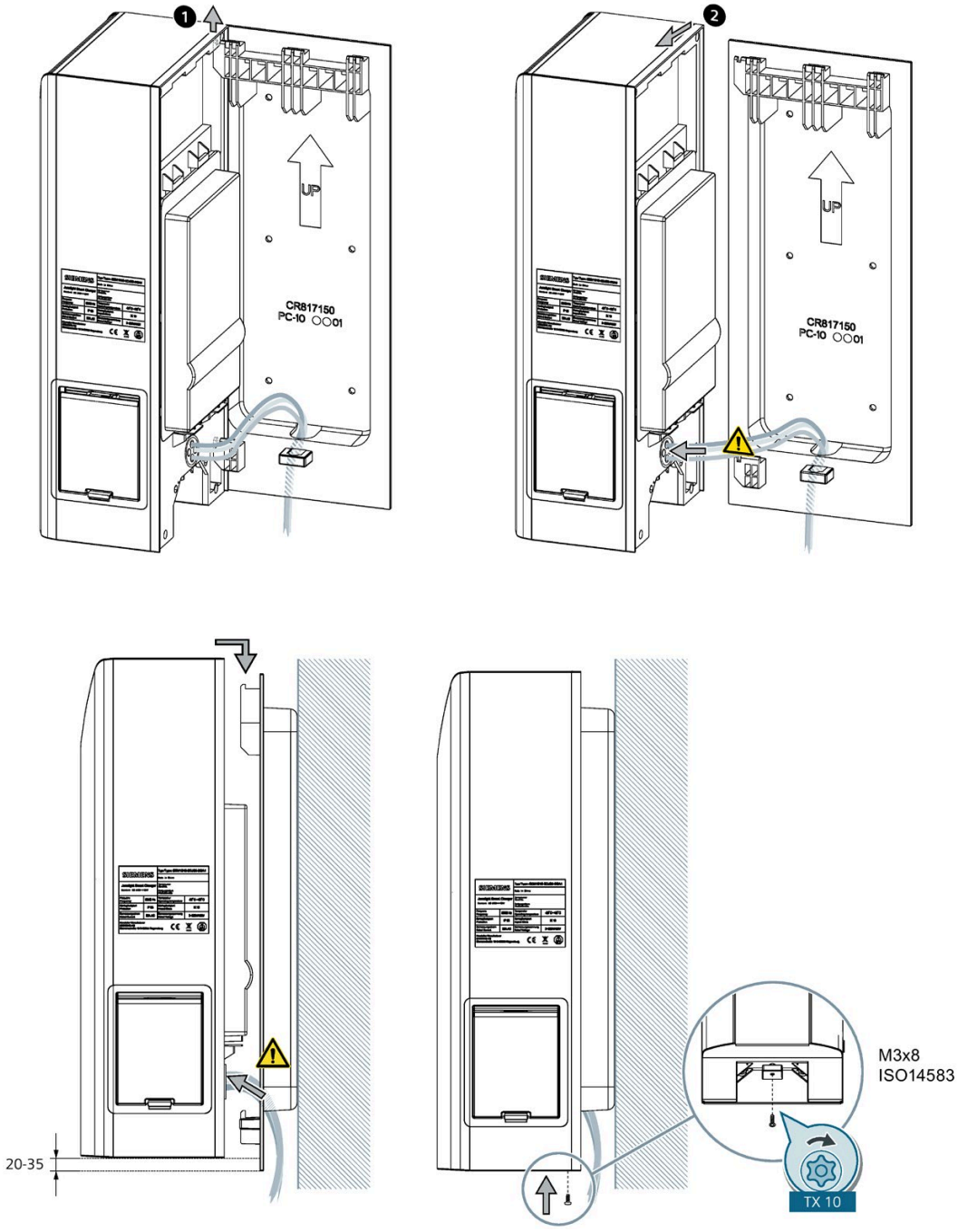

4.11 Switching on and testing

Procedure for switching on and checking the Wallbox

Perform the following steps to switch on and check the charging unit.

1. Switch on the power supply of the Wallbox supply line.
2. Switch on the backup fuses, the load breaker switch and the RCCB.
3. The "Power" LED lights up on the Wallbox.
   If the display does not light up on the Wallbox, check the power supply using a measuring instrument. When measuring, follow the regional regulations.

Test run with acceptance

- Perform the measurements according to DGUV regulation 3 or the comparable regional regulations.

NOTICE
Danger for devices from high voltage When conducting insulation resistance measurements between active conductors or between active conductors and protective conductor, the measurement direct voltage should be limited to 250 V. Otherwise, the device can be destroyed.

Concluding work

1. Remove the packing material and protective films.
2. Clean the unit if required.
3. Complete the commissioning report in accordance with the regional regulations, e.g. DGUV regulation 3.

Note

The Wallboxes are designed for continuous operation. Daily reboots (power cycle) may affect the service life of the components.

Commissioning 5

5.1 Offline mode

The Wallbox can be used in offline mode, i.e. without an Internet connection, but without the following functions:

- Automatic firmware update
- Status display in the VersiCharge app
- Delay function in the VersiCharge app

To do this, switch on the power supply and wait until the Wi-Fi status LED (see also User interface structure (Page 18)) flashes white. In this mode, vehicle loading and authentication via RFID (local share list) is possible.

5.2 Commissioning with PC or mobile device

For the integrated functions of the Wallbox, you need an Internet connection to connect to Siemens Device Management. The connection is set up during the commissioning described here.

Preparing commissioning

Commission the Wallbox either with your mobile device using the VersiCharge app or with a PC tool.

For a single Wallbox, we recommend the VersiCharge app on a smartphone.

To commission multiple devices in a network (including parent-child setup), use the VersiCharge Configurator PC tool.

You can find additional information in the download area of the respective tools.

Commissioning with the VersiCharge app

To perform the commissioning with the VersiCharge app, follow these instructions:

1. Install the VersiCharge- app from the Google Play Store (https://play.google.com/store) or the Apple App Store (https://www.apple.com/ios/app-store/) on your mobile device.
2. Create a user account in the app
   - Change password
   - Set notifications
   - Manage contact details
3. Connect your smartphone to the WiFi of the Wallbox and follow the instructions on your mobile device.
4. Connect the Wallbox to the Internet via the VersiCharge app. The following options are available for this:
   - Mobile Internet (SIM card only in the Parent device)
   - Wi-Fi
   - Ethernet
5. Connect the Wallbox to Siemens Device Management. This takes place automatically.
6. Assign a descriptive name for the Wallbox.
7. Check the settings.

You can find detailed commissioning instructions here (https://siemens.com/versicharge).

Commissioning with the VersiCharge Configurator PC tool

Follow the instructions for commissioning with the VersiCharge Configurator:

1. Download the VersiCharge Configurator from the Internet (https://siemens.com/versicharge) (see SIEMENS Industry Online Support SIOS (https://support.industry.siemens.com/cs/de/en/view/109798469))
2. Install the VersiCharge Configurator (see SIEMENS Industry Online Support SIOS (https://support.industry.siemens.com/cs/de/en/view/109798469))
3. Follow the Configuration Tool installation manual to commission the Wallbox.
4. Check the settings.

Note

The child units can connect via the shared Wi-Fi of the parent unit. This is only possible for parent units that are connected to the Internet via a cellular modem or Ethernet.

Changing the SSID and password

NOTICE
Changing the SSID and password If you want to change network settings such as SSID and password after the Wallbox has been successfully connected to Siemens Device Management, proceed as follows: 1. Delete the link of the Wallbox with Siemens Device Management via the VersiCharge app or via VersiCharge Siemens Cloud (https://versicharge.emobility.siemens.cloud/). 2. Repeat the above steps for commissioning. If a Wi-Fi repeater is used later, we recommend using the same SSID and password that were used when registering the Wallbox.

Siemens Care Remote Service

Please note: The product includes Care Remote Service during the standard warranty period. You can find additional information on the SIEMENS Care Service on the Internet (https://siemens.com/emobility-care).

5.3 Notes on setting up the communication connection

5.3.1 Required open ports

These open ports are required for communication with the Siemens Device Management, logging server and OCPP server:

- 20
- 21
- 22
- 23
- 123
- 443
- 514
- 9019
- 20000
- Communications port for OCPP. This depends on the server.

5.3.2 Wi-Fi connection

The Wi-Fi interface enables communication of devices with one another, as well as communication with the Siemens Device Management. The following combinations are possible:

- Wi-Fi connection from any Wallbox directly to Siemens Device Management via local Wi-Fi receiver with an open Internet connection.
- Wi-Fi connection from each child to the central parent. Ethernet connection from parent to Siemens Device Management via local LAN receiver with an open Internet connection.
- Wi-Fi connection from each child to the parent and then via mobile from the parent to the Siemens Device Management.

5.3.3 SIM card

All parent devices of the type 8EM131x-xxxxx-3xxx are implemented with a micro SIM card slot for establishing a mobile wireless connection. The parent devices of the type 8EM131x-xxxxx-3xx1 are supplied without a SIM card. This must be supplemented by the customer if required. Observe the provider's specifications for establishing a data connection. The parent devices of the type 8EM131x-xxxxx-3xx2 are delivered equipped with a factory-fitted SIM card for the connection to the Siemens Device Management system (and also to the Siemens OCPP backend if appropriate). Note that the mobile wireless data connection can incur costs.

Requirement

When working on the SIM card, follow the instructions below:

1. Deenergize the Wallbox
2. Secure it against being switched on again
3. Open the Wallbox
4. Check the activation
5. Put on ESD clothing and use an ESD grounding wrist strap connected to the protective conductor

Configuring a mobile wireless connection

When using SIM cards from third-party providers, follow these instructions:

1. You can use a micro or nano SIM card with an adapter. Make sure that the PIN request is disabled.

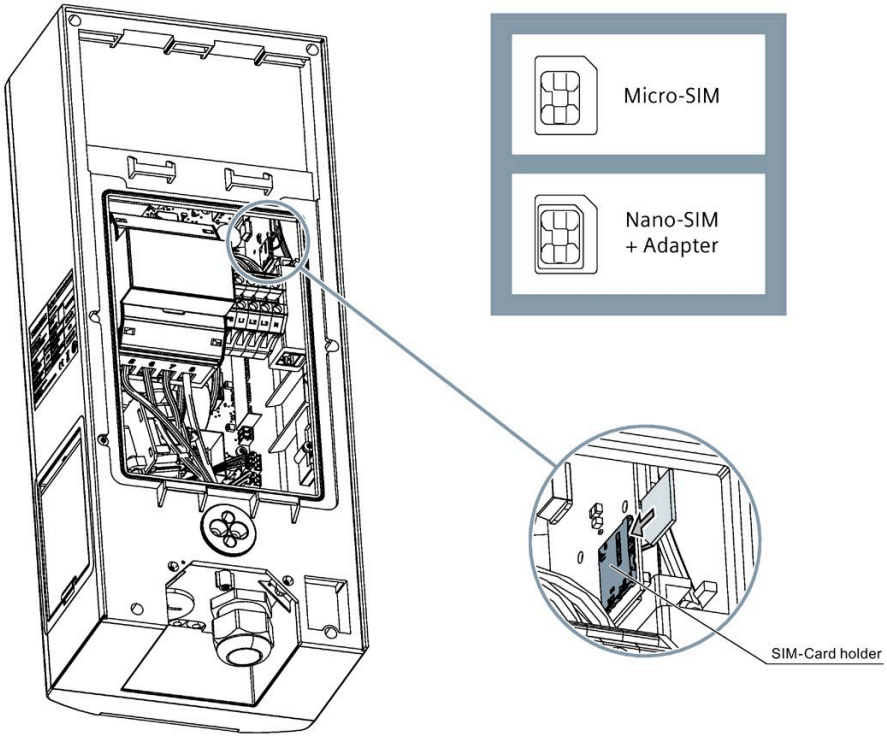

To set up a SIM card from a third party, you need the following information from the provider:

- Dial-up number (modem dial string)
- Access Point Name (APN)
- If appropriate, password and user name

Note

Devices that are delivered with a factory-fitted SIM card (8EM131x-xxxxx-3xx2) require the following parameters to establish a connection to the Siemens Device Management System:

- Modem dial string: *99#
- APN: cu.siemens.global
- Password and user name are not required

5.3.4 Overview of Modbus, RS485 and Ethernet

Requirement

Modbus communication requires firmware version V2.113 or higher.

Properties

The Wallbox has two interfaces for networking

- An RJ45 socket for Ethernet (cable type: CAT 6 or better). RJ45 copper Ethernet port. This 10/100BASE-T connection enables data rates of up to 100 Mbps and supports the Modbus TCP/IP protocol. Standard UTP cables of Category 6 or better are recommended at an industry-standard maximum distance of 100 meters.
- An RS485 interface for Modbus RTU (cable type: Twisted Pair, shielded, 0.5 mm^2)

You connect several Wallboxes via Modbus.

Note

Safety information

The Modbus protocol is an open protocol and it is the responsibility of the installer to ensure the security of the wiring of these connections to prevent tampering.

Using the Modbus RTU protocol

VersiCharge AC Wallboxes can act as Modbus devices and make real-time data available via the Modbus RTU protocol. Higher-level Modbus devices connected to the Wallbox, e.g. Modbus servers, can perform the following actions:

- Read data
- Write data to the registers of your Wallbox
- Change the device configuration
- Initiate control actions

This allows them to:

- Take on the function of Child Modbus devices
- Provide data in real time via the Modbus protocol

Parent Modbus devices have the following tasks:

- Read-only access to this data
- Write data to the registers of your meter
- Change the device configuration
- Initiate control actions

Modbus map

The Modbus map is available on request from the Download Center (see also siemens.com/versicharge (https://siemens.com/versicharge)).

5.3.5 Setting communication

Information on the register maps command set is available here.

Supported function codes	1. 0x03 (read multiple Holding Registers) 2. 0x10 (write multiple Holding Registers) 3. 0x11 (Report Slave ID) – The prerequisite is that a unit is connected with Modbus
Maximum number of RS485 charging units that can be connected to the Parent Modbus unit or Modbus controller	24
Maximum communication bus length (Modbus RTU) Note: The standard Ethernet segment lengths apply for Modbus TCP	304.8 m (1000 ft)
Query rate	1 s (min. 500 ms)
Standard Modbus TCP server port	Port 502
The following parameters must be used to establish a Modbus RTU connection	Baud rate = 38400 Parity = even Data bits = 8 Stop bit = 1

5.4 Managing and using RFID

The Wallbox supports various authentication methods via OCPP.
In addition, it is possible to save the user IDs of authorized RFID cards in a local, preconfigured list.

You manage the RFID cards via the following channels:

- Modbus controller
- OCPP-based server
- On the device using Admin RFID cards

The management of RFID cards via Admin cards in the local, preconfigured list is described under **Releasing or locking RFID cards**.

Using RFID

With RFID cards, you authenticate yourself to start or end a charging process. The procedure is described in section Charging (Page 52).

The supplied RFID User cards are not released. The next section describes the management of the RFID User cards.
Alternatively, authentication via Modbus controller or OCPP server is possible. Authentication can also be disabled in this way.

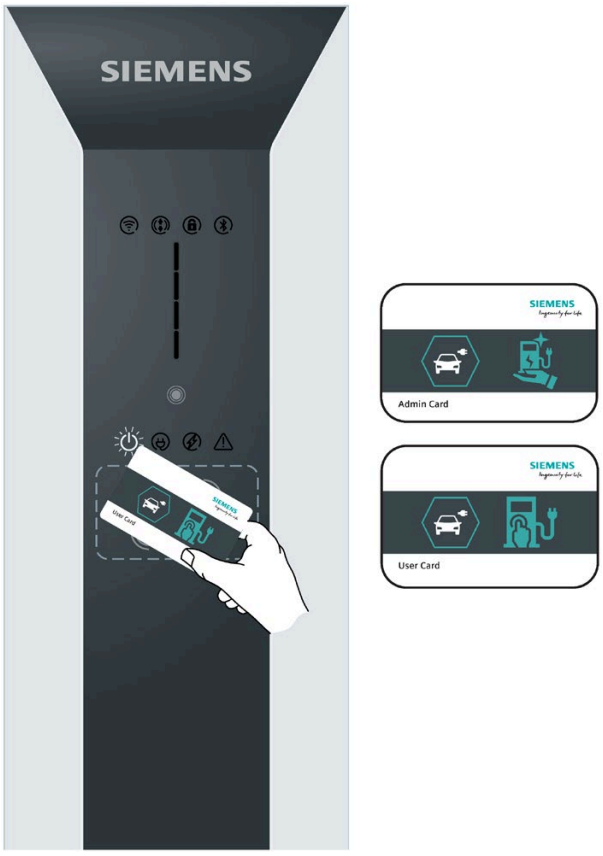

Figure 5-1 RFID card types

Supported RFID cards

For authentication, the Wallbox has an integrated RFID reader that is activated ex works. The following table lists the supported chip types.

Table 5- 1 Supported chip types

Card series	Memory	Security	Supported protocols
MIFARE Classic	1 K, 4 K	Crypto1	ISO14443A Part 1–3
MIFARE Plus	1 K, 2 K, 4 K	AES, Crypto1	ISO14443A Part 1–4
MIFARE DESFire	2 K, 4 K, 8 K	AES, 3DES	ISO14443A Part 1–4
MIFARE Ultralight	40, 48, 128, 144	None, 3DES	ISO14443A Part 1–3

Releasing or locking RFID cards

A preconfigured list containing all User cards for which approval is given is saved locally in the Wallbox.

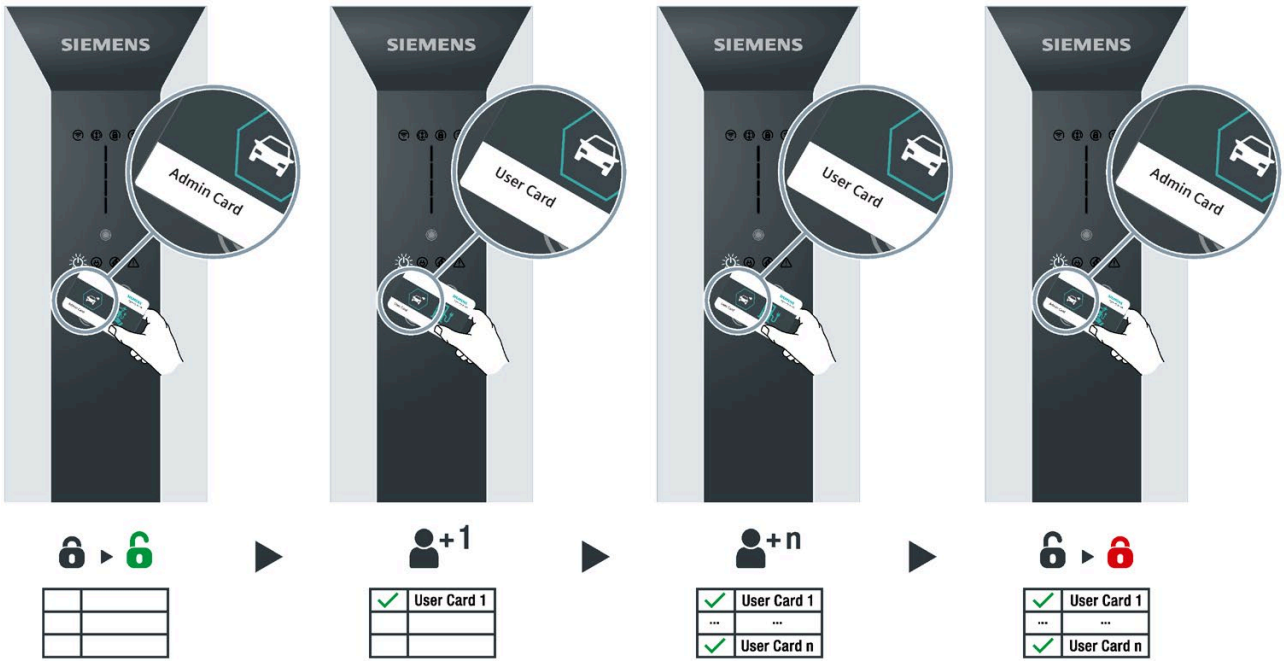

Figure 5-2 Releasing and locking RFID cards

Releasing/locking with Admin card

1. Hold an Admin card in front of the RFID reader. An acoustic signal is emitted.
   It is now possible to manage the RFID cards.
2. **Adding and removing:**
   - Hold a new User card in front of the RFID reader. An acoustic signal is emitted.
     The new User card has been added to the preconfigured list.
   - Hold a released User card in front of the RFID reader. An acoustic signal is emitted.
     The User card has been removed from the preconfigured list.
3. Hold another User card in front of the RFID reader to release or lock User cards in the preconfigured list.
   If necessary, repeat this process as often as desired.
4. Hold an Admin card in front of the RFID reader to end management of RFID cards. An acoustic signal is emitted.

Operation

6

6.1 Status displays

Display

Table 6- 1

Display	Description	Action
Lights up white	Wallbox is ready for operation	
Lights up white	Vehicle connected	
Lights up white	Charging in progress	
Flashes white	After switch-on, the charger will go to Access Point mode	Connect PC or mobile device for commissioning

Display	Description	Action
Lights up red	No Wi-Fi reception	Check the router
Lights up orange	Charger is connected to router. Weak Wi-Fi.	Boost the Wi-Fi. Read the note about changing the SSID and password in the section Commissioning with PC or mobile device (Page 39).
Lights up green	Charger is connected to router. Strong Wi-Fi.	
Flashes blue	Attempting to connect to Siemens Device Management	
Lights up white	Ready for operation (with successful connection and registration in Siemens Device Management)	

Display	Description	Action
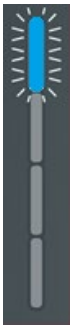 Lights up blue	Access blocked	Unlock via RFID/OCPP/Modbus
Flashes white	2 h delay	Wait until charging process starts.
Flashes white	4 h delay	Wait until charging process starts.

Display	Description	Action
Flashes white	6 h delay	Wait until charging process starts.
Flashes white	8 h delay	Wait until charging process starts.
	Press the Touch button for 5 seconds for maximum charging power	Power presetting is set to the maximum for the charging process. Note: Function is inactive with an existing OCPP connection.

6.2 Charging

Safety instructions during the charging process

DANGER

Risk of electric shock and fire

Touching live parts may cause electric shock or even death. Defective connectors or cables may cause fire.

- Do not kink or squeeze the charging cable. Do not draw the charging cable over sharp edges or hot surfaces.
- Do not use the Wallbox if dangerous damage or tampering is visible. Inform the operator. Keep yourself and other persons away from the Wallbox.
- Grip the power plug to pull the charging cable out of the socket. Do not grip by the cable itself.
- Never touch the mains plug with wet hands.
- Do not connect or disconnect any cables during a thunderstorm.

DANGER

Risk of overheating and fire

Using unauthorized accessories increases the risk of fire due to overheating.

- Only use a charging cable approved for the vehicle.
- Do not use an extension for the connection between the Wallbox and the vehicle.
- Adapter and adapter cable are not permitted.

CAUTION

Risk of accident

Ensure that the charging cable does not block any escape route or constitute a tripping hazard. In this case, the cable becomes an obstacle that can lead to injuries. The cable could also be ripped out from the anchoring and cause damage to the vehicle or the Wallbox.

Basic procedure

Connect the vehicle and the Wallbox using a suitable cable. For a Wallbox with permanently connected cable, insert this cable into the socket of the electric vehicle. After successful authentication, the charging process is started automatically by the vehicle and displayed via the Status LED. You have the option of preselecting a time delay and viewing the status via the VersiCharge app. After the charging process ends, the device switches to "Ready" status (LED display (Page 18)).

Different models

The charging process is described for the socket version with type 2 charging port.

The procedure is largely identical for the following version.

- Fixed charging cables type 2

The following deviations may occur during the sequence:

- Plugging and unplugging directly at the Wallbox
- Connector lock

Start charging

Proceed as follows to start charging:

1. Check if the required charging point is ready for operation: The Power LED must be lit up.
2. Log in to the Wallbox.
   - If the RFID function is activated on your device, hold your RFID card in front of the card reader. An acoustic signal is emitted.
   - Register on the device with a method supported by the operator, for example via an app.
3. After successful authorization, the Wallbox can be used.
4. Open the cover and insert the plug of the charging cable into the socket of the Wallbox. Make sure that the charging cable is not damp or dirty.
5. Insert the socket of the charging cable into the connector system of the electric vehicle. Follow also the instructions of the vehicle manufacturer.
6. The communication connection to the vehicle is established. This process can take some time depending on the connection speed and reaction speed of the backend and vehicle.
7. The Wallbox locks the plug into the socket. The "Vehicle connected" LED lights up.
8. After successfully locking the connector, the charging process starts automatically. The "Charging active" LED lights up. The vehicle is now being charged. The connectors are still protected against unauthorized removal.
9. The Status LEDs inform you about the current charging status.
10. The LED bar display and the LED "Charging process active" extinguish when the charging process is completed or stopped.

The LED bar display indicates that current is flowing to the vehicle and the vehicle battery is charging. The LED bar display does not light up in the following cases:

- The vehicle is not drawing power.
  - The Wallbox is pausing, for example, because of load management
  - The vehicle pauses the charging
- The charging of the vehicle battery is completed.

Completing the charging

You or the electric vehicle can stop charging at any time.

Note

Option: Permanently installed charging cables

After charging, place the permanently installed charging cable in the holder provided.

Cables that are not stowed may cause the following hazards:

- You may trip over it
- Damage to the plug
- Damage to the cable
- Moisture may enter the plug

There are 3 different ways to terminate charging:

Proceed as follows to end the charging process with the RFID card:

1. Place the RFID card in front of the icon for the card reader.
   Once the RFID card has been identified, the validity is checked.
2. The charging process stops when a valid RFID card has been detected. The locking of the charging cable is released.
3. Remove the charging cable.
4. Remove the plug from the socket of your electric vehicle.
5. Stow away the provided charging cable. To do this, follow the instructions in the manual for your vehicle.

Proceed as follows to end the charging process with the operator app:

1. Charging point selection: Select your vehicle or the charging point by the operator.
2. Charging stops.
3. Remove the unlocked charging cable.
4. Remove the plug from the socket of your electric vehicle.
5. Stow away the provided charging cable. To do this, follow the instructions in the manual for your vehicle.

Proceed as follows to end the charging process by disconnecting the vehicle:

1. Follow the instructions in the manual for your vehicle.
2. End the charging process.
3. Unlock the charging cable at the vehicle.
4. Remove the plug from the socket of your electric vehicle.
5. Remove the plug from the Wallbox.
6. Stow away the provided charging cable. To do this, follow the instructions in the manual for your vehicle.

Faults 7

7.1 Fault elimination

DANGER

Risk of electric shock and fire

Touching live parts may cause electric shock or even death. Damaged charging cables and connectors can cause a fire.

- The system may only be opened and repaired by the manufacturer, its service department or similarly qualified persons. This also applies to the replacement of a damaged charging cable.
- Follow the five safety rules in the event of damage and faults.

Procedure in the event of a fault

Follow these steps in case of a Wallbox fault:

1. You can find a selection of possible causes of faults in the Error messages (Page 55) section.
2. If you are unable to rectify the fault yourself, contact the operator's service hotline.

Repeating commissioning / logoff from Siemens Device Management

If this is necessary, follow these steps:

1. With the device switched on, delete the link of the Wallbox to the Siemens Device Management
   - in the VersiCharge app under Account > My Charger > Deregister Charger or
   - via the Internet (https://versicharge.emobility.siemens.cloud/) under Settings > EV Chargers > Unlink Charger
2. Repeat the above steps for commissioning

7.2 Error messages

The following tables show excerpts of possible error messages. or a detailed list of error messages and their remedies, refer to the operating and troubleshooting guide under the following link (https://support.industry.siemens.com/cs/ww/en/view/109805527).

Faults

The symbols, their meaning and solutions are described in the three columns.

Table 7- 1 Fault messages

Display	Description	Solution
Lights up white	Ground fault (DC fault)	The device is in a fault state. Eliminate the fault and then push the touch button to reset.
Flashes red	Some kind of fault has occurred	Turn the supply voltage off and on again.
Lights up red	Fault has occurred	Error code: 001. Notify Technical Support.
Lights up red	Fault has occurred	Error code: 002. Notify Technical Support

Display	Description	Solution
Flashes red	Fault has occurred	Error code: 003. Notify Technical Support
Flashes red	Fault has occurred	Error code: 004. Notify Technical Support
Flashes red	Fault has occurred	Error code: 005. Notify Technical Support

Display	Description	Solution
Flashes red	Fault has occurred	Error code: 006. Notify Technical Support
Flashes red	Fault has occurred	Error code: 007. Notify Technical Support
Flashes red	Fault has occurred	Error code: 008. Notify Technical Support

Display	Description	Solution
Flashes red	Fault has occurred	Error code: 009. Notify Technical Support
Flashes red	Fault has occurred	Error code: 010. Notify Technical Support
Flashes red	Fault has occurred	Error code: 011. Notify Technical Support

Note

Some faults are not caused by the Wallbox, but by compatibility to the electric vehicle or by settings activated in the electric vehicle.

Check the settings in the electric vehicle if a fault has occurred. The user can define the charging time, for example, in the settings of the electric vehicle. For safety reasons, such settings overwrite all commands in the Wallbox and end the charging process. Adapt the settings in your electric vehicle.

Maintenance and service 8

8.1 Storage and transport

Observe the following general conditions when storing and transporting the Wallbox:

- The permissible storage temperature of the Wallbox is -40 °C to +60 °C.
- The permissible air humidity is 5 to 98%, no condensation.
- The Wallbox may only be transported in the transport packaging provided for this purpose using the supplied safety and shock-absorbing materials.
- Disconnect all external cable connections for the transport of the Wallbox.

  Set switches of the fuses to the "Off" position.

  Close any transport locks on the cover.
- Avoid shocks and impacts during transport.

8.2 Cleaning and maintenance

Safety measures

Note

Before performing cleaning or service work, disconnect the system from the power and ensure it cannot be switched back on. To do this, deactivate at least all fuses to which the Wallbox is connected.

⚠ DANGER

Risk of electrocution

Touching live parts may cause electric shock or death.

Turn off all power supply to the unit before cleaning charging cables. Secure the Wallbox against being switched on again.

⚠ DANGER

Risk of electrocution

Do not use steam jets or water jets for cleaning, as they may cause moisture to ingress the Wallbox. Moisture inside the Wallbox poses a risk of electric shock.

The manufacturer is not liable for damage resulting from improper cleaning methods.

Cleaning guidelines

- Do not use solvents or corrosive or abrasive detergents.
- Use a mild, non-corrosive cleaning agent, e.g. dishwashing detergent, even if heavily soiled.
- Use a wet cloth to clean the Wallbox outside and dry it.
- Deionized water is particularly suitable for cleaning the unit.
- Do not scrape off stubborn dirt using hard objects.
- Do not use any sharp-edged tools.
- Soften paper stickers in advance for easy removal.
- Make sure that water does not get underneath the cover of the charging socket or into the charging plug.

Clean the Wallbox according to agreed cycles to ensure optimum quality as well as functionality.

Note

Use environmentally friendly cleaning agents approved for cleaning plastics (polycarbonate).

Note

Cleaning the interior of the Wallbox is not normally required for regular maintenance. Only qualified personnel may clean the inside of the Wallbox if the situation demands, e.g. due to a dusty environment.

8.3 Maintenance

Note

High currents flow over a long period of time when charging the electric vehicle. The electrical installation of the Wallbox must be checked regularly to prevent overheating of cables and resulting damage.

Note

Only qualified personnel trained for these activities may perform this work.

The appendix contains the following lists:

- Installation and maintenance schedule (Page 69)

Inspecting fixed charging cables

Inspect fixed charging cables, charging plugs, and charging plug holders regularly for the following:

- Damage
- Wear
- Contamination
- Humidity

The operator is responsible for safe operation. Set the inspection intervals in such a way that safe operation is always guaranteed.

8.4 Software update

Software updates

Siemens makes software updates available as part of continuous function extensions and improvements. The software updates are installed automatically. Make sure that the Internet connection is available.

Also read the information about this at the Siemens Care Remote Service on the Internet (https://siemens.com/emobility-care)

Service & Support

9

9.1 Siemens Industry Support

Fast and easy access to current information on the following:

- **Product support**
  All the information and extensive know-how on your product, technical specifications, FAQs, certificates, downloads, and manuals.
- **mySupport**
  Your personal working area in Siemens Industry Online Support for notifications, support queries, and configurable documents.

This information is provided by Siemens Industry Online Support (https://support.industry.siemens.com/cs/ww/)on the internet.

Technical Support

Technical Support helps you in the event of technical problems with the product.

Find your local support number here: eMobility customer service (www.siemens.com/emobility-customer-service)

Service hours are 24 hours a day 7 days a week.

Make sure that you have the following information to hand before making the phone call:

- Your contact details
  - Name
  - E-mail address
  - Telephone number
- Article number
- Serial number (nameplate on Wallbox)
- Purchase date
- Installation location
  - Country
  - Town
  - Street
- Problem description
  - Fault
  - LED status
  - Actions already performed

Disposal 10

10.1 Recycling and disposal

Disposal of the packaging

The packaging of the Wallbox does not contain any hazardous substances. Send the packaging for recycling in accordance with the applicable regulations in your country.

Disposal of the Wallbox

For the environmentally friendly recycling and disposal of your old device, contact a certified disposal service for electronic scrap. Dispose of the device in accordance with the applicable regulations in your country. "Waste electrical equipment must not be disposed of as unsorted municipal waste, e.g. household waste. The current local national/international regulations must be observed for disposal."

Technical specifications 11

11.1 Technical specifications

Performance features and options

Designation	**VersiCharge AC Wallbox IEC**
Charging mode according to IEC 61851-1	Mode 3
Connection to vehicle according to IEC 62196-2	8EM1310-..H..-.... : Socket Type 2 8EM1310-..J..-.... : Permanently connected charging cable (7 m)
Electrical data	
Connection voltage	8EM1310-2...: 1~ 230 V AC (-20% ... +15%), 50/60 Hz 8EM1310-3...: 3~ 230/400 V AC (-20% ... +15%), 50/60 Hz
Max. output power/connection power	8EM1310-2...: 7.4 kW 8EM1310-3...: 22 kW
Rated current (adjustable)	10/ 13/ 16/ 20/ 32 A
Cable cross-section (power cable)	1.5 ... 10 mm² (depending on the max. current setting)
Low voltage network	8EM11310-2: TT/ TN/ IT 8EM11310-3: TT/ TN
Energy measurement	Integrated MID counter, Class B (± 1%)
Protection	Ground fault monitoring 30 mA AC/6 mA DC, undervoltage, overvoltage, overcurrent +10% above configured threshold, min. +2A/ 5s, overvoltage category III
Residual current circuit breaker (RCCB)/Miniature circuit breaker (MCB)	Not contained
Mechanical specifications	
Mounting	Wall or column (available as accessories)
Dimensions (H x W x D)	446 x 180 x 158 mm
Weight	8EM1310-..H..-.... : 4.3 kg 8EM1310-..J..-.... : 7.8 kg
Color	Silver Metallic (Pantone 10077), black
Ambient conditions	
Ambient temperature operation	-30 ... +50 °C Direct sunlight can influence the operating temperature.
Ambient temperature storage	-40 ... 60 °C
Relative humidity	5 ... 98% (no condensation)
Max. installation altitude	2000 m above sea level
Degree of protection (IP) according to IEC 60529	8EM1310-..H..-.... : IP 56 8EM1310-..J..-.... : Wallbox IP56, Coupler (Vehicle Plug) IP54
Degree of impact resistance according to EN 62262	IK 10
Communication and authentication	

Designation	**VersiCharge AC Wallbox IEC**
Interfaces	Ethernet, WiFi (Dual-Band), RS-485 Parent types 8EM1310-....-3... additionally GSM, 4G, LTE
Communication protocols	OCPP 1.6J Modbus RTU Modbus TCP
Parent/Child	Up to 9 child types per parent
SIM card (recommended data volume)	250 MB / month
RFID acc. to • ISO 14443A • ISO 14443B • ISO 18092 ECMA-340	Reader integrated, 2 Admin cards + 5 User cards in scope of delivery
Standards and legal bases:	EN IEC 61851-1, EN IEC 61851-21-2, EN IEC 60068-2-52, EN IEC 61000-6-1, EN 61000-6-3, EN IEC 61000-6-4, EN 330 330, EN 300 328, EN 301 511, EN 301 893, IEC 62955

A list of order options can be found in the section Variants available for order (Page 67) in the appendix.

Times for full charging

The charging times depend on several factors, however mainly on the battery capacity of the vehicle. To determine the time required for full charging of the vehicle, refer to the vehicle documentation.

Appendix A

A.1 Variants available for order

Overview of variants

These variants of the Wallbox are available for ordering.

Design	Power	Type	Article number
Variant with socket	7.4 kW / 230 V AC	Child	8EM1310-2EH04-0GA0
	7.4 kW / 230 V AC	Parent incl. SIM card	8EM1310-2EH04-3GA2
	7.4 kW / 230 V AC	Parent without SIM card	8EM1310-2EH04-3GA1
	22 kW / AC 400 V	Child	8EM1310-3EH04-0GA0
	22 kW / AC 400 V	Parent incl. SIM card	8EM1310-3EH04-3GA2
	22 kW / AC 400 V	Parent without SIM card	8EM1310-3EH04-3GA1
Variant with 7 m cable	7.4 kW / 230 V AC	Child	8EM1310-2EJ04-0GA0
	7.4 kW / 230 V AC	Parent incl. SIM card	8EM1310-2EJ04-3GA2
	7.4 kW / 230 V AC	Parent without SIM card	8EM1310-2EJ04-3GA1
	22 kW / AC 400 V	Child	8EM1310-3EJ04-0GA0
	22 kW / AC 400 V	Parent incl. SIM card	8EM1310-3EJ04-3GA2
	22 kW / AC 400 V	Parent without SIM card	8EM1310-3EJ04-3GA1

A.2 Accessories

Protection of persons and wiring

Siemens offers residual current circuit breakers and miniature circuit breakers as accessories.

The trained electrician makes the selection according to the local conditions and regulations at the place of use.

The following table shows possible combinations of circuit breakers in connection with the Wallbox variant, including rated current setting.

Variant	Rated current setting	MCB, C characteristic	RCCB, Type A	RCCB, Type B
VersiCharge AC Wallbox single-phase (7.4 kW / 230 V AC)	10 A	5SL6510-7	5SV3311-6	5SV3321-4
	13 A	5SL6513-7		
	16 A	5SL6516-7		
	20 A	5SL6520-7	5SV3312-6	5SV3322-4
	32 A	5SL6532-7	5SV3314-6	5SV3324-4
VersiCharge AC Wallbox 3-phase (22 kW / 400 V AC)	10 A	5SL6610-7	5SV3342-6	5SV3342-4
	13 A	5SL6613-7		
	16 A	5SL6616-7		
	20 A	5SL6620-7		
	32 A	5SL6632-7	5SV3344-6	5SV3344-4

Note

Additional information on personal protection

Follow deviating local regulations.

According to IEC 61851-1, a 30 mA RCCB Type A is sufficient due to the 6 mA DC fault current monitoring integrated in the Wallbox.

The listed product recommendations relate to RCCBs with immediate tripping. Components with delayed tripping (KK01 variant) are also suitable for installation in households and offer an additional degree of ruggedness.

Note

Additional information on wiring protection

The tripping characteristic C is recommended for applications with high startup current and power peaks. The tripping characteristic D is available optionally.

Depending on the installation case and country-specific regulations, different pole configurations may be required. The recommended products relate to household applications. MCBs of the 5SY4 and 5SY6 series are recommended for systems with multiple Wallboxes for additional protection.

Additional information is available here (https://mall.industry.siemens.com/).

A.3 Installation and maintenance schedule

Introduction

Depending on the area of application, perform the general cleaning work and maintenance work every 6 months. Shorten this interval according in the event of difficult usage conditions.

Follow the regionally valid regulations on servicing and maintaining this type of electrical charging equipment.

Cleaning

Clean dirt, dust and residues from the Wallbox and the operating area. Wipe the surfaces with a damp cloth. For stubborn stains, use a cleaning agent containing alcohol. Do not clean the device with a pressure washer. Do not use aggressive cleaning agents.

Check

Check the Wallbox for the following:

- Cuts, damage and soiling
- Defects and rust
- Clearly visible signs of faded colors
- Residue or damage on the cables, cable holders and plugs
- Signs of rust at the plug pins
- Accumulation of snow around the Wallbox

Contact the supplier if you notice any anomalies.

Avoid accumulation of snow around the Wallbox. Clear the area accordingly. In heavy snowfall, clear the area daily.

Wallbox checklist

The following table shows the tasks and their expected duration for the following applications:

- Installation/assembly
- Commissioning
- Maintenance

Table A- 1 Installation and maintenance schedule

Action	Installa-tion/assembly	Commis-sioning	Mainte-nance	Duration in min.
Mark and drill holes	x			5
Mount Wallbox	x			10
Assemble and connect the connection cable	x			15
Visual and functional check for mechanical damage • Type 2 plug or lid • Housing		x	x	1
Commissioning with the mobile app / PC tool		x		10
Check • Fault message • Backend connection (e.g. Siemens Device Management) • SIM card		x	x	5
Cleaning			x	5
Check charging sockets or charging cables • Charging cable and plug for damage			x	2
Measurements acc. to DIN VDE, e.g.: • Insulation measurement • Grounding resistance measurement • Loop impedance measurement		x	x	25*
Generate maintenance log		x	x	15*
Function test • Trial charge (with commercial or electric vehicle)	x	x	x	10*
Setup time		x	x	10*
Indication of the next test date		x	x	2
Read out meter readings		x	x	2
Travel time	x	x	x	

*Scope and duration may vary as they depend on local regulations.

A.4 Dimensions of the Wallbox

Dimension drawing

The following graphic shows the general dimensions of the Wallbox charging unit regardless of the version.

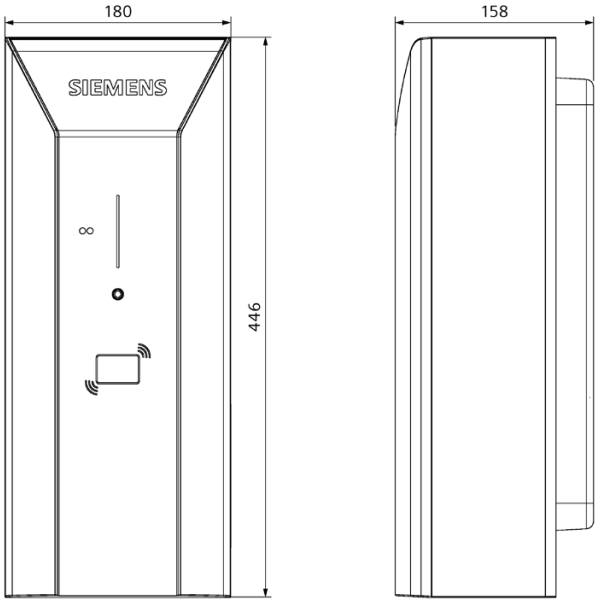

Figure A-1 Dimension drawing of the Wallbox

Note that the dimensions of the Wallbox with permanently installed charging cable and Type 2 plug according to IEC 62196 differ and you will need additional space.

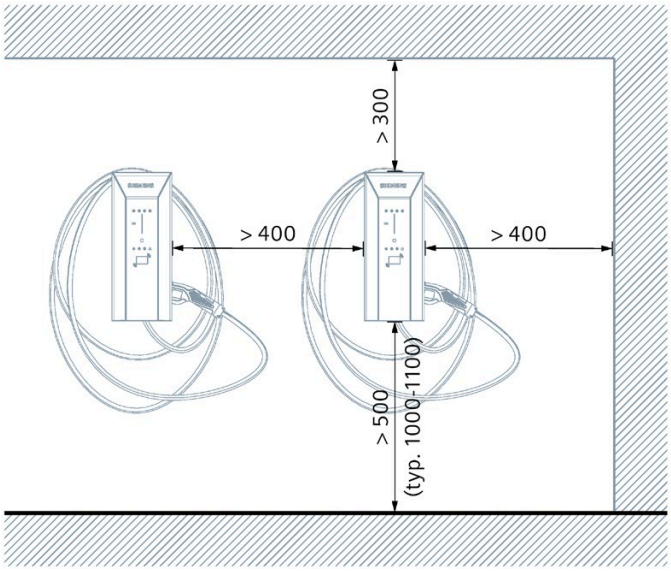

Figure A-2 Distances at the wall and between adjacent Wallboxes

A.5 Quality documentation

CE marking

The declaration of conformity is kept available for the competent authorities at:

Siemens AG
Smart Infrastructure
Distribution Systems
Mozartstr. 31c
91052 Erlangen, Germany

These files are also available for download on the Siemens Industry Online Support (https://support.industry.siemens.com/cs/de/en/view/109794281) pages, under "Declaration of Conformity".

List of abbreviations

B

B.1 Abbreviations

AC	Alternating current	Alternating current
APN	Access Point Name	Gateway access point
DC	Direct current	Direct current
DGUV	Deutsche Gesetzliche Unfallversicherung	German statutory accident insurance
ESD	Electrostatic Discharge	Electrostatic discharge
FAQ	Frequently Asked Questions	Frequently asked questions
FI	Fehlerstromschutzschalter	Residual current circuit breaker
IEC	International Electronical Commission	International standardization commission under private law
IK		Protection class for impact and mechanical stress
ISO	International Organization for Standardization	International standards organization
IP	International Protection	Protection class for solid foreign bodies/contact and water
MCB	Miniature circuit breaker	Miniature circuit breaker
MID	Measurement Instruments Directive	
OCPP	Open Charge Point Protocol	
PC	Personal Computer	Single station computer
RCCB	Residual current operated circuit breaker	Residual current circuit breaker
RFID	Radio Frequency Identification	Radio frequency technology for identification
RSS	Rich Site Summary	Data format for summarizing article series and message series
SW	Schlüsselweite (for wrenches)	Width across flats
WiFi	Wireless Fidelity	Specific type of WLAN

Index

A

Amperage:, 32
App, 39

C

CE marking, 72
Charging, 52
checklist, 69

D

DIP switch settings, 34

E

EC Declaration of Conformity, 72
Error code, 55

F

Fault, 55
Fault messages, 55
Function extensions, 62

M

Messages, 55
Mobile wireless connection, 42

O

Operational messages, 48
Overview of variants, 67

R

Register map command set, 45
Required tools, 23
Requirements, 23

S

Safety rules for electrical work, 12
Service plan, 69
Siemens Care Remote Service, 62
Siemens Device Management, 39
Status displays, 48
Support, 63

V

VersiCharge Configurator, 40